2024 MULE PRO-FXR™ 1000 LE

PARTS DIAGRAM

Fuel Injection

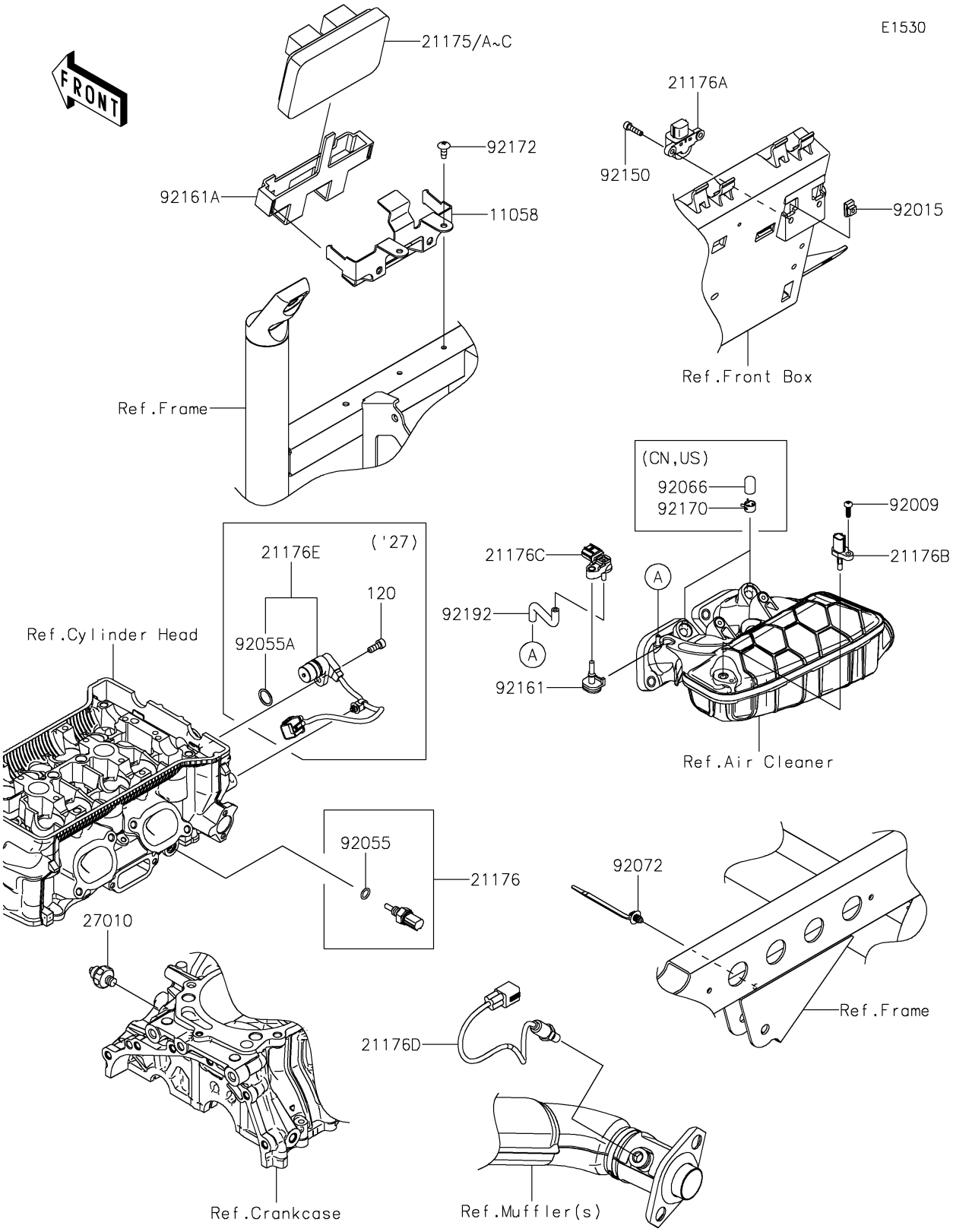

© 2026 Kawasaki Motors Corp., U.S.A.

2024 MULE PRO-FXR™ 1000 LE

PARTS LIST

Fuel Injection

ITEM NAME	PART NUMBER	QUANTITY

© 2026 Kawasaki Motors Corp., U.S.A.