2025 MULE PRO-FXR 1000 LE

PARTS DIAGRAM

Crankcase

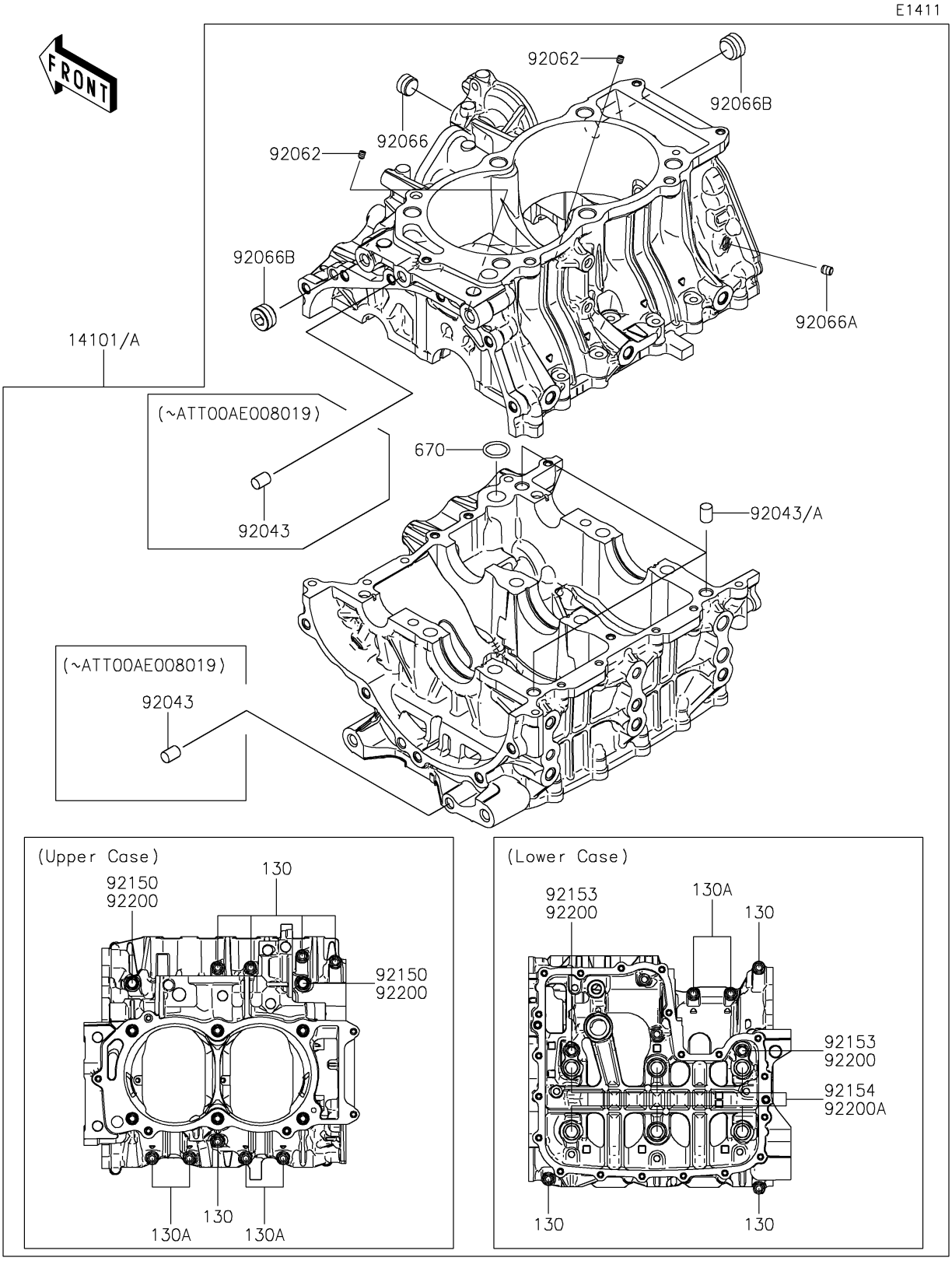

© 2026 Kawasaki Motors Corp., U.S.A.

2025 MULE PRO-FXR 1000 LE

PARTS LIST

Crankcase

ITEM NAME	PART NUMBER	QUANTITY
SET-CRANKCASE (Ref # 14101)	14101-0012	1
SET-CRANKCASE (Ref # 14101A)	14101-0040	1
PIN,10X14 (Ref # 92043)	92043-1506	5
PIN,10X14 (Ref # 92043A)	92043-1506	3
NOZZLE (Ref # 92062)	92062-0004	2
PLUG (Ref # 92066)	92066-0836	1
PLUG,OIL LINE,7.2X8 (Ref # 92066A)	92066-1012	1
PLUG (Ref # 92066B)	92066-3779	2
BOLT,8X70 (Ref # 92150)	92150-1483	2
BOLT,FLANGED,8X90 (Ref # 92153)	92153-1632	2
BOLT (Ref # 92154)	92154-3912	6
WASHER,8.2X16X1.6 (Ref # 92200)	92200-0047	4
WASHER,11.5X20.5X3.2 (Ref # 92200A)	92200-0727	6
BOLT-FLANGED,6X55 (Ref # 130)	130CA0655	8
BOLT-FLANGED,6X45 (Ref # 130A)	130CB0645	6
O RING,18MM (Ref # 670)	670D2018	1

© 2026 Kawasaki Motors Corp., U.S.A.