2026 RIDGE HVAC

PARTS DIAGRAM

Front Fender(s)

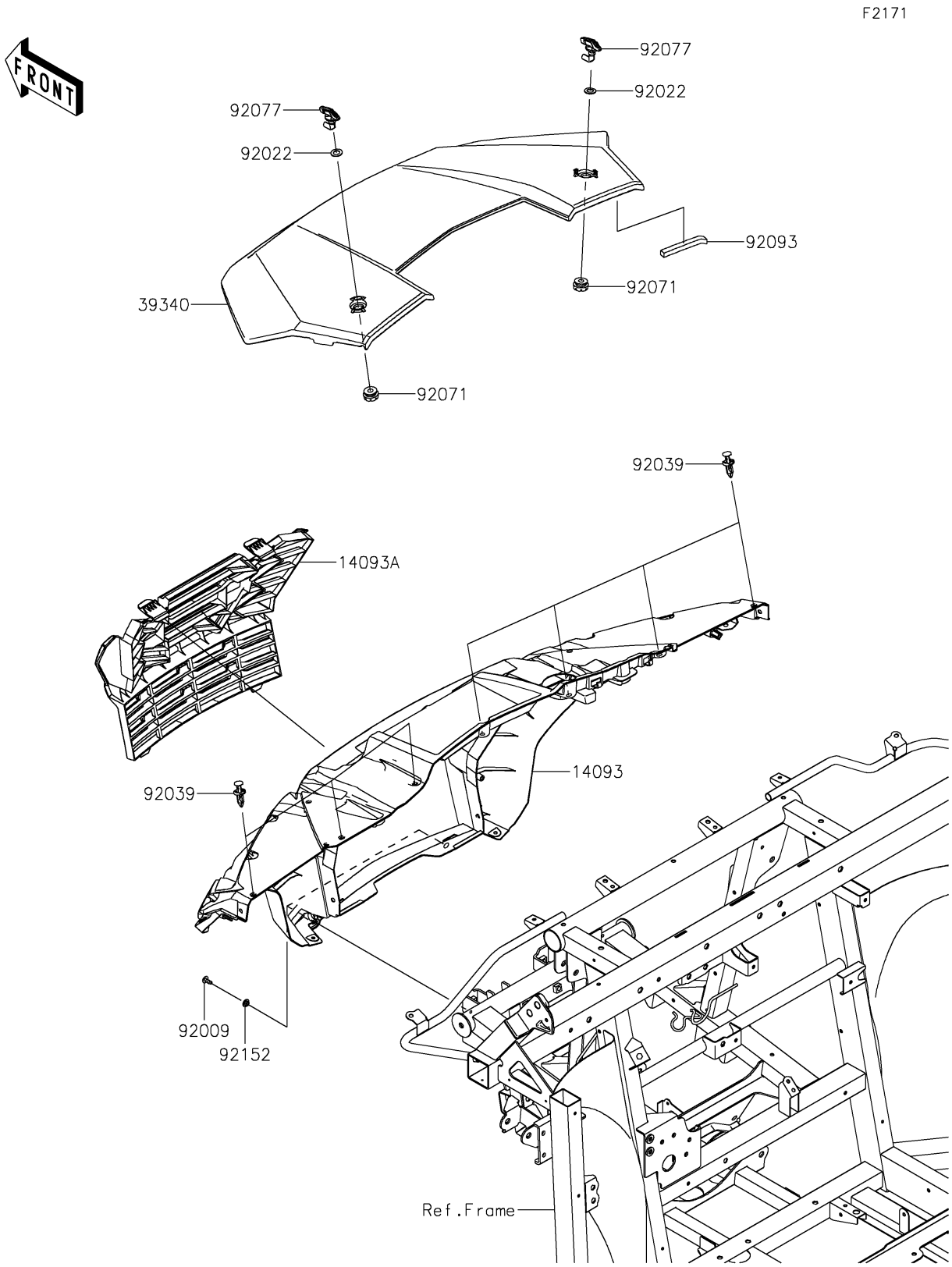

© 2026 Kawasaki Motors Corp., U.S.A.

2026 RIDGE HVAC

PARTS LIST

Front Fender(s)

ITEM NAME	PART NUMBER	QUANTITY
COVER,FRONT GUARD,BLACK (Ref # 14093)	14093-1308-6Z	1
COVER,FR GRILLE (Ref # 14093A)	14093-1309	1
HOOD,M.GRAYSTONE (Ref # 39340)	39340-0002-HI	1
SCREW,TAPPING,6X16 (Ref # 92009)	92009-1166	2
WASHER,12.5X22X1.2 (Ref # 92022)	92022-072	2
RIVET (Ref # 92039)	92039-0865	7
GROMMET (Ref # 92071)	92071-0746	2
KNOB (Ref # 92077)	92077-0033	2
SEAL,10X10X110 (Ref # 92093)	92093-0785	1
COLLAR,6.3X9.5X4.1 (Ref # 92152)	92152-1571	2

© 2026 Kawasaki Motors Corp., U.S.A.