2026 RIDGE® ST HVAC

PARTS DIAGRAM

Camshaft(s)/Tensioner

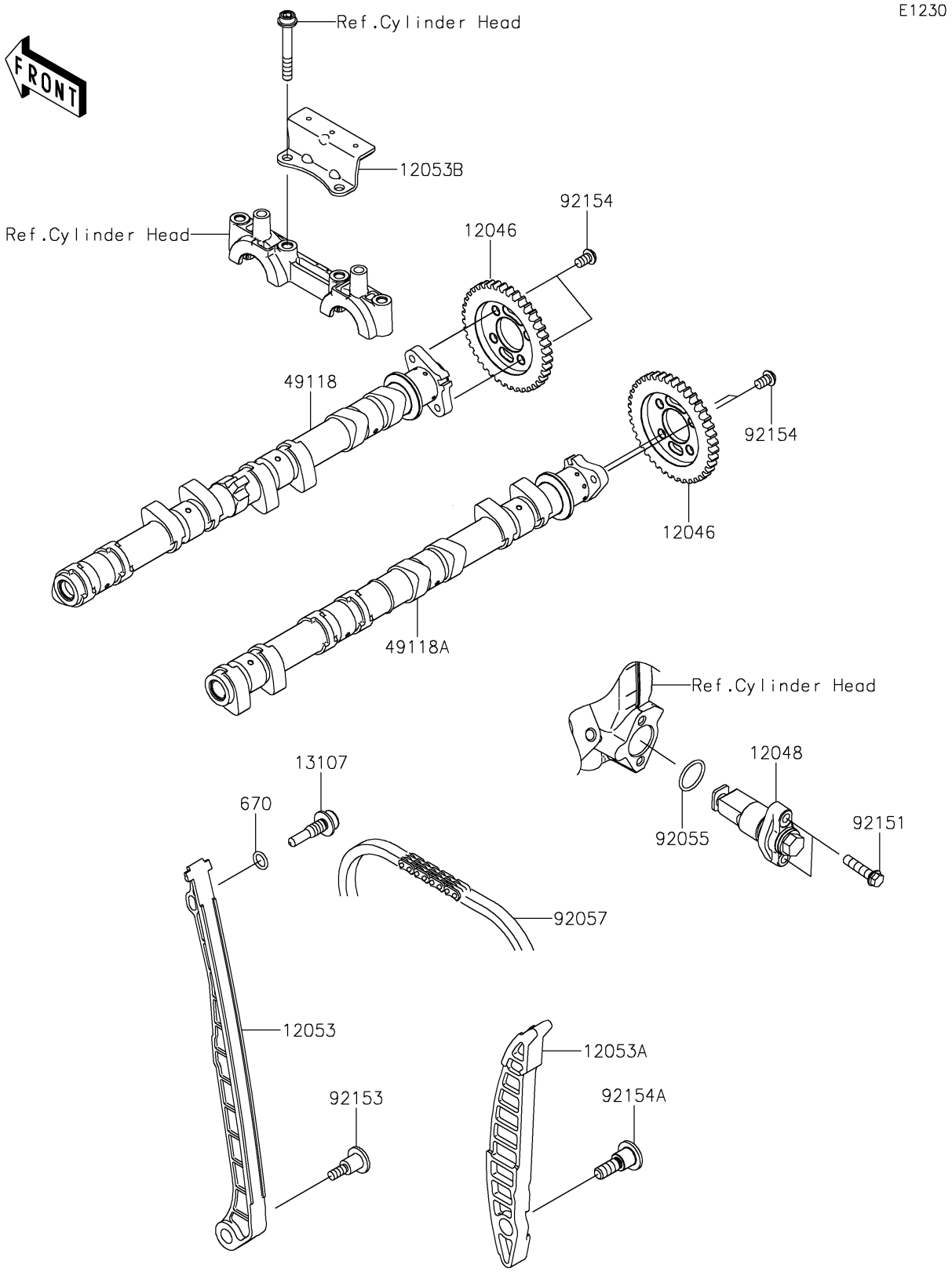

© 2026 Kawasaki Motors Corp., U.S.A.

2026 RIDGE® ST HVAC

PARTS LIST

Camshaft(s)/Tensioner

ITEM NAME	PART NUMBER	QUANTITY
SPROCKET,CAM,40T (Ref # 12046)	12046-0639	2
TENSIONER-ASSY (Ref # 12048)	12048-0102	1
GUIDE-CHAIN,FR (Ref # 12053)	12053-0327	1
GUIDE-CHAIN,RR (Ref # 12053A)	12053-0346	1
GUIDE-CHAIN,UPP (Ref # 12053B)	12053-0347	1
SHAFT,CHAIN GUIDE (Ref # 13107)	13107-0157	1
CAMSHAFT-COMP,IN (Ref # 49118)	49118-1291	1
CAMSHAFT-COMP,EX (Ref # 49118A)	49118-1292	1
RING-O,18.8X1.9 (Ref # 92055)	92055-086	1
CHAIN,98XRH2015-134M (Ref # 92057)	92057-0874	1
BOLT,FLANGED-SMALL,6X25 (Ref # 92151)	92151-1930	2
BOLT,SOCKET,6X24.5 (Ref # 92153)	92153-1200	1
BOLT,TORX,6X10 (Ref # 92154)	92154-0062	4
BOLT,8X29 (Ref # 92154A)	92154-3930	1
O RING,9MM (Ref # 670)	670D1509	1

© 2026 Kawasaki Motors Corp., U.S.A.