2026 KX™112

PARTS DIAGRAM

Rear Suspension

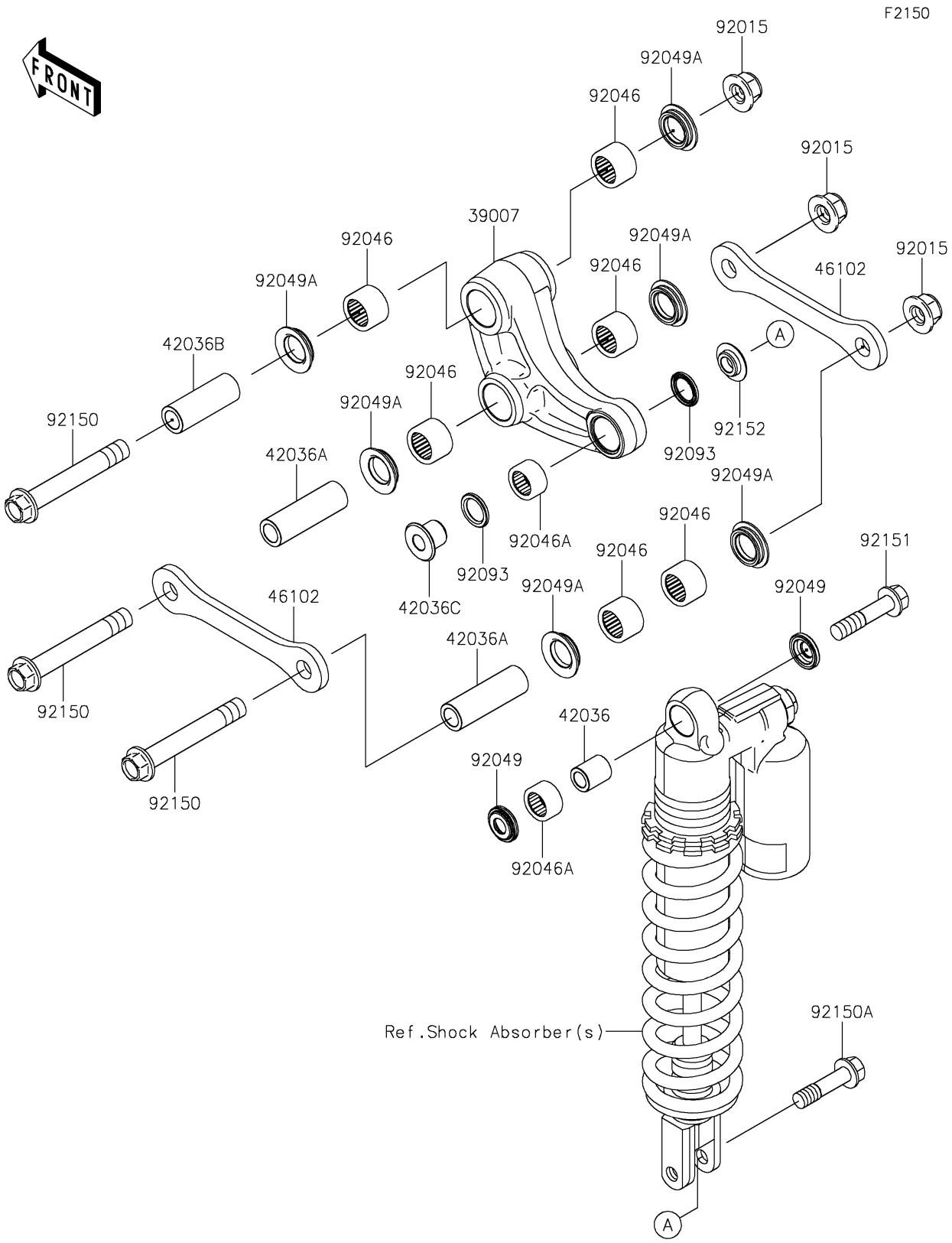

© 2026 Kawasaki Motors Corp., U.S.A.

2026 KX™112

PARTS LIST

Rear Suspension

Kawasaki
Let the Good Times Roll®

ITEM NAME	PART NUMBER	QUANTITY

© 2026 Kawasaki Motors Corp., U.S.A.