2025 KLX®140R L

PARTS DIAGRAM

Chassis Electrical Equipment

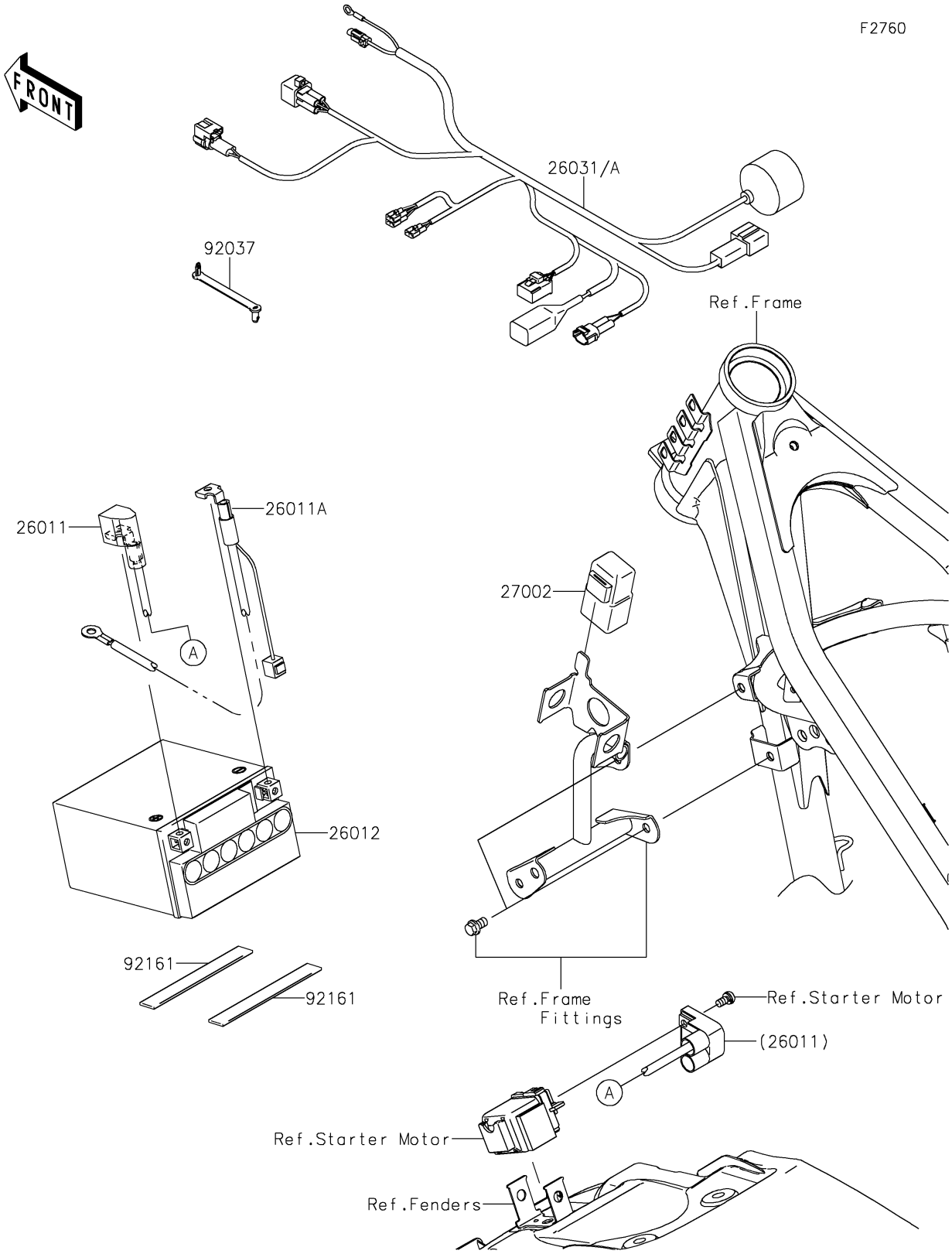

© 2026 Kawasaki Motors Corp., U.S.A.

2025 KLX®140R L

PARTS LIST

Chassis Electrical Equipment

ITEM NAME	PART NUMBER	QUANTITY
WIRE-LEAD,BATTERY(+) (Ref # 26011)	26011-1998	1
WIRE-LEAD,BATTERY(-) (Ref # 26011A)	26011-1999	1
BATTERY,FTX7L-BS,12V 6AH (Ref # 26012)	26012-0683	1
HARNESS,MAIN (Ref # 26031A)	26031-4047	1
RELAY-ASSY (Ref # 27002)	27002-1086	1
CLAMP,SPEED,L=58 (Ref # 92037)	92037-1163	5
DAMPER (Ref # 92161)	92161-0543	2

© 2026 Kawasaki Motors Corp., U.S.A.