# 2025 KLX®140R L

## PARTS DIAGRAM

### Frame

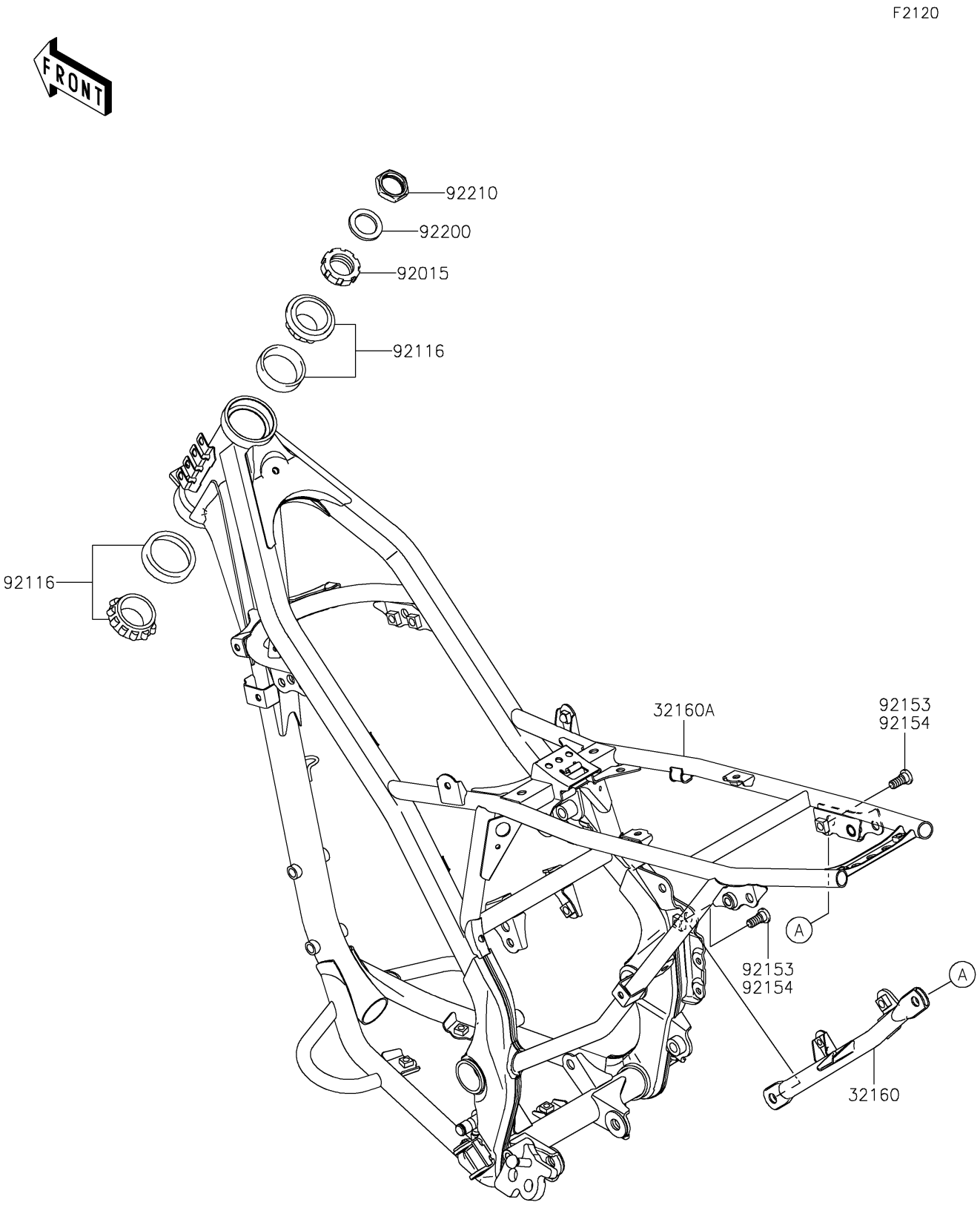


© 2026 Kawasaki Motors Corp., U.S.A.

# 2025 KLX®140R L

## PARTS LIST

### Frame

| ITEM NAME | PART NUMBER | QUANTITY |
|---|---|---|
| FRAME-COMP,RR,P.SILVER (Ref # 32160) | 32160-0239-458 | 1 |
| FRAME-COMP,MAIN,P.SILVER (Ref # 32160A) | 32160-0896-458 | 1 |
| NUT,STEERING STEM,25MM (Ref # 92015) | 92015-1684 | 1 |
| BEARING-ROLLER,H1-CAP32005JRRS (Ref # 92116) | 92116-1065 | 2 |
| BOLT,SOCKET,8X20 (Ref # 92154) | 92154-7228 | 2 |
| WASHER,STEERING STEM (Ref # 92200) | 92200-0517 | 1 |
| NUT,STEERING STEM,22MM (Ref # 92210) | 92210-1521 | 1 |

© 2026 Kawasaki Motors Corp., U.S.A.