2023 KLX®140R

PARTS DIAGRAM

Engine Cover(s)

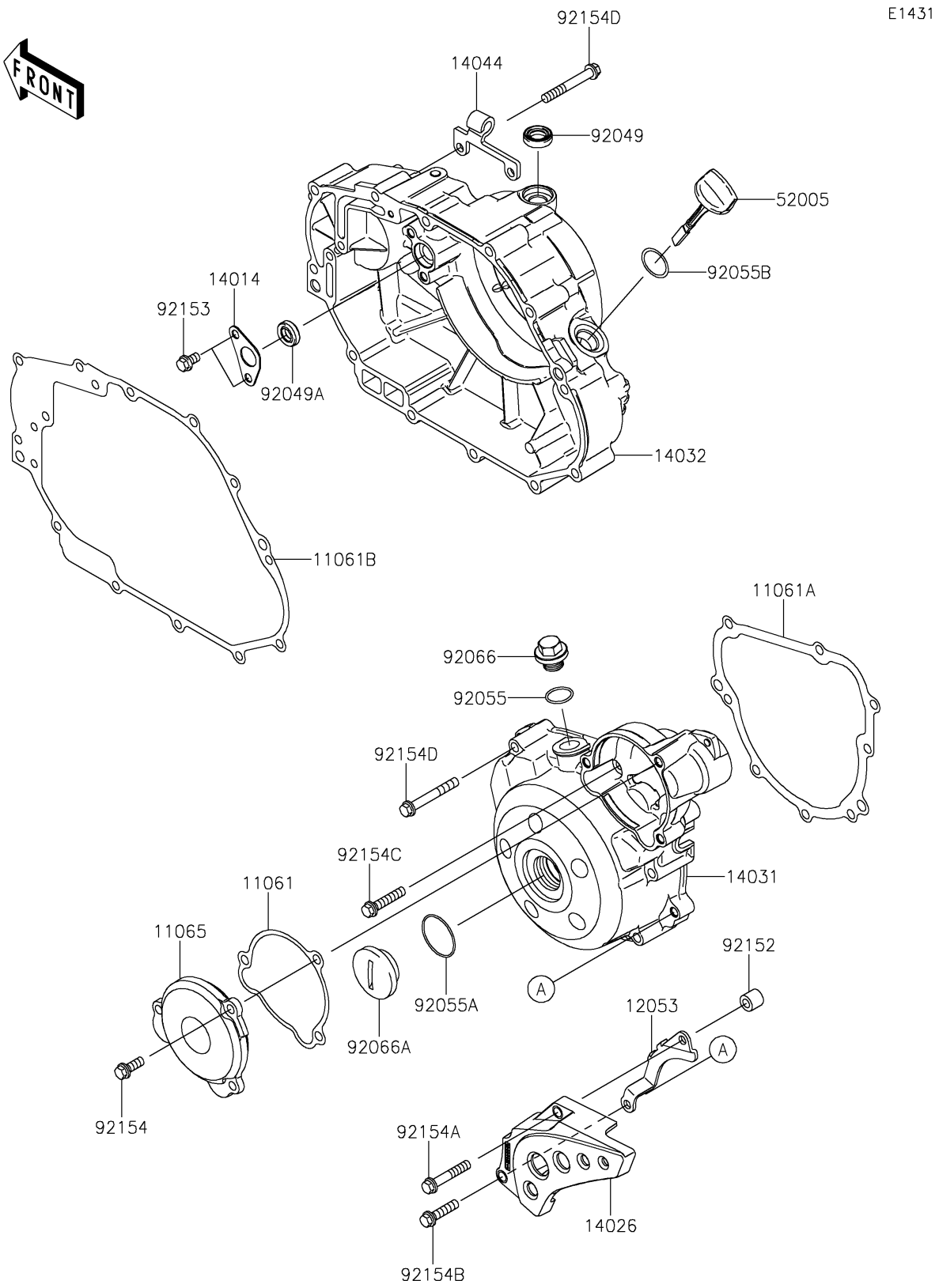

© 2026 Kawasaki Motors Corp., U.S.A.

2023 KLX®140R

PARTS LIST

Engine Cover(s)

Kawasaki
Let the Good Times Roll®

ITEM NAME	PART NUMBER	QUANTITY
GASKET (Ref # 11061)	11061-0300	1
GASKET,GENERATOR COVER (Ref # 11061A)	11061-0400	1
GASKET,CLUTCH COVER (Ref # 11061B)	11061-0401	1
CAP (Ref # 11065)	11065-0801	1
GUIDE-CHAIN (Ref # 12053)	12053-0133	1
PLATE-POSITION (Ref # 14014)	14014-1153	1
COVER-CHAIN (Ref # 14026)	14026-0084	1
COVER-GENERATOR (Ref # 14031)	14031-0116	1
COVER-CLUTCH (Ref # 14032)	14032-0116	1
HOLDER-CABLE (Ref # 14044)	14044-0572	1
GAUGE,OIL LEVEL (Ref # 52005)	52005-0724	1
SEAL-OIL,12X20X5.5 (Ref # 92049)	92049-0150	1
SEAL-OIL (Ref # 92049A)	92049-0812	1
RING-O,14.8X2.4 (Ref # 92055)	92055-0194	1
RING-O,25.7X2.4 (Ref # 92055A)	92055-0763	1
RING-O,20X2 (Ref # 92055B)	92055-0764	1
PLUG,14X10 (Ref # 92066)	92066-0724	1
PLUG,GENERATOR COVER CAP (Ref # 92066A)	92066-1565	1
COLLAR,6.5X12X11 (Ref # 92152)	92152-2893	1
BOLT,6X10 (Ref # 92153)	92153-1140	2
BOLT,FLANGED,6X16 (Ref # 92154)	92154-0460	3
BOLT (Ref # 92154A)	92154-1134	1
BOLT,FLANGED,6X25 (Ref # 92154B)	92154-1156	1
BOLT,FLANGED,6X30 (Ref # 92154C)	92154-1159	2
BOLT,FLANGED,6X45 (Ref # 92154D)	92154-4024	18

© 2026 Kawasaki Motors Corp., U.S.A.