2027 KLX®140R

PARTS DIAGRAM

Gear Change Mechanism

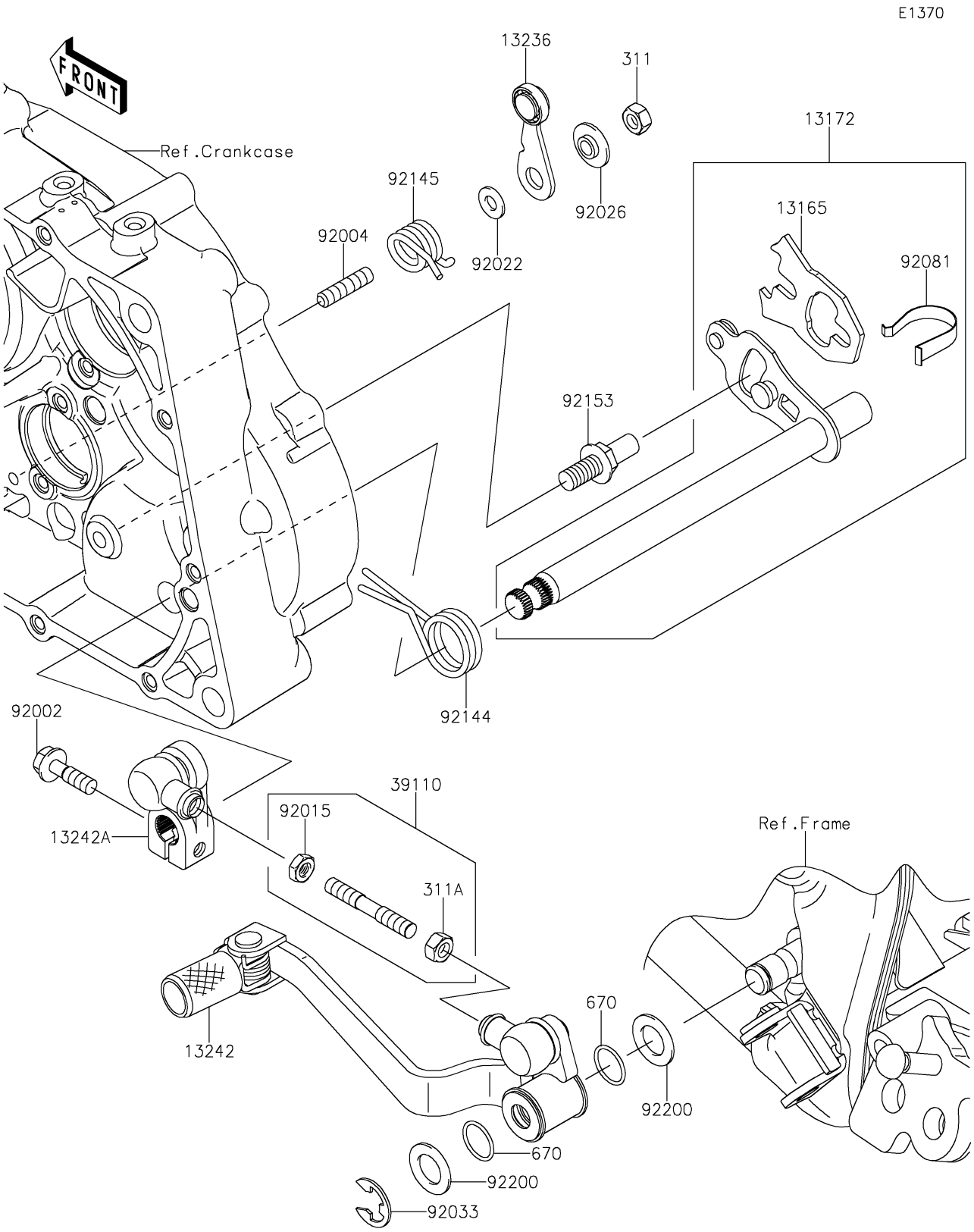

© 2026 Kawasaki Motors Corp., U.S.A.

2027 KLX®140R

PARTS LIST

Gear Change Mechanism

ITEM NAME	PART NUMBER	QUANTITY
PAWL,CHANGE SHAFT (Ref # 13165)	13165-0003	1
SHAFT-ASSY-CHANGE (Ref # 13172)	13172-0009	1
LEVER-COMP,POSITION (Ref # 13236)	13236-0157	1
LEVER-ASSY-CHANGE,PEDAL (Ref # 13242)	13242-0134	1
LEVER-ASSY-CHANGE (Ref # 13242A)	13242-0135	1
ROD-ASSY-TIE (Ref # 39110)	39110-0027	1
BOLT,6X20 (Ref # 92002)	92002-1237	1
STUD,6X12 (Ref # 92004)	92004-0032	1
NUT,LEFT HANDED,6MM (Ref # 92015)	92015-1178	1
WASHER,6X12.8X1.2 (Ref # 92022)	92022-1827	1
SPACER (Ref # 92026)	92026-0750	1
RING-SNAP,TYPE-E,10MM (Ref # 92033)	92033-1178	1
SPRING,CHANGE LEVER (Ref # 92081)	92081-1829	1
SPRING,CHANGE PEDAL RETURN (Ref # 92144)	92144-1345	1
SPRING (Ref # 92145)	92145-0349	1
BOLT,8X15.5 (Ref # 92153)	92153-1144	1
WASHER,12.5X21X1.2 (Ref # 92200)	92200-0388	2
NUT-HEX,6MM (Ref # 311)	311BA0600	1
NUT-HEX,6MM (Ref # 311A)	311BB0600	1
O RING,12MM (Ref # 670)	670B2012	2

© 2026 Kawasaki Motors Corp., U.S.A.