2023 KLX®140R

PARTS DIAGRAM

Crankshaft

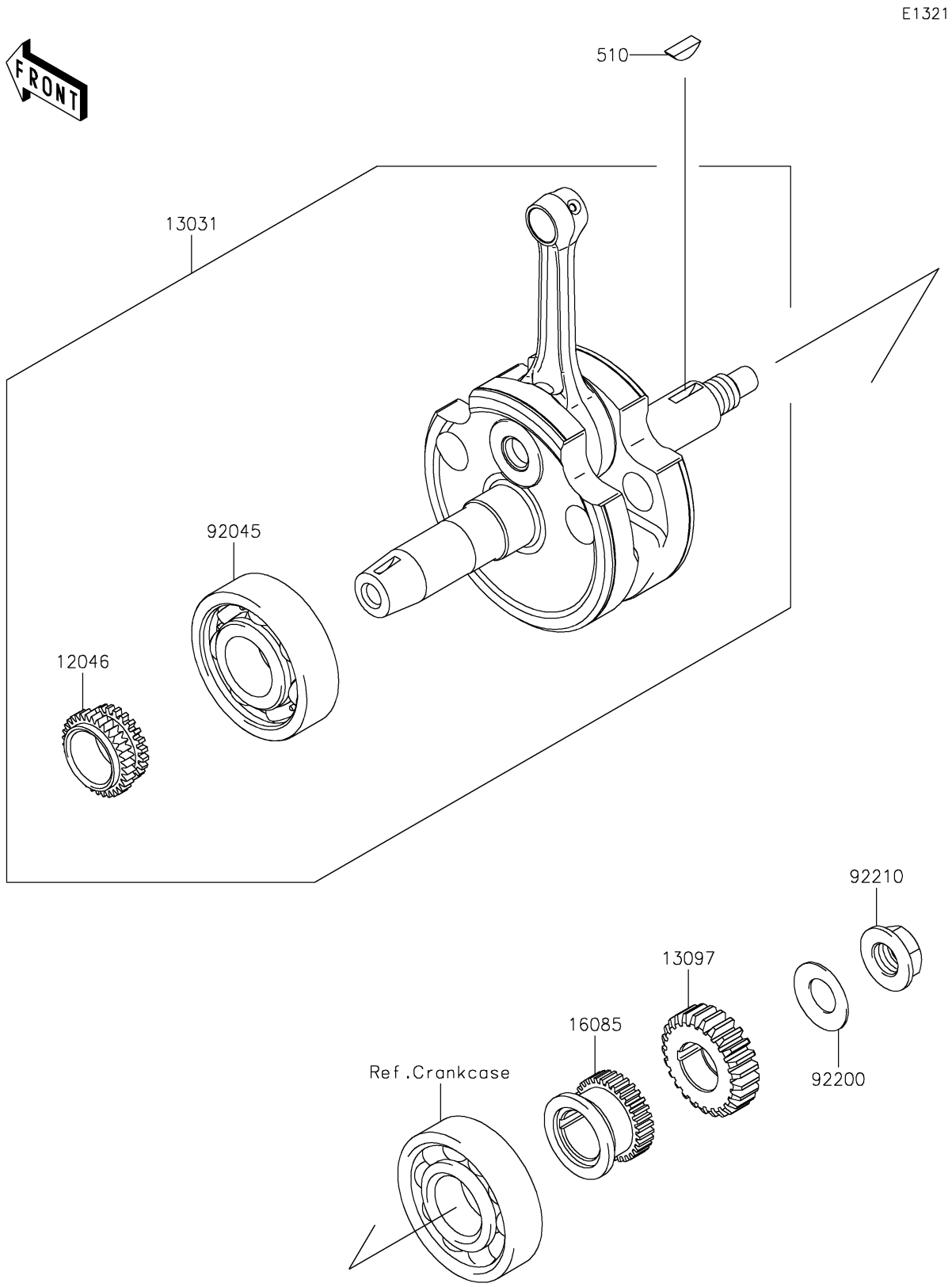

© 2026 Kawasaki Motors Corp., U.S.A.

2023 KLX®140R

PARTS LIST

Crankshaft

ITEM NAME	PART NUMBER	QUANTITY
SPROCKET,18T (Ref # 12046)	12046-0575	1
CRANKSHAFT-COMP (Ref # 13031)	13031-1529	1
GEAR-PRIMARY SPUR,25T (Ref # 13097)	13097-0569	1
GEAR,21T (Ref # 16085)	16085-0607	1
BEARING-BALL,25X62X17 (Ref # 92045)	92045-0895	1
WASHER,14.2X28X1.5 (Ref # 92200)	92200-0553	1
NUT,14MM,LEFT HANDED (Ref # 92210)	92210-1647	1
KEY-WOODRUFF (Ref # 510)	510A4200	1

© 2026 Kawasaki Motors Corp., U.S.A.