2027 Teryx KRX4 1000 TR

PARTS DIAGRAM

Air Cleaner

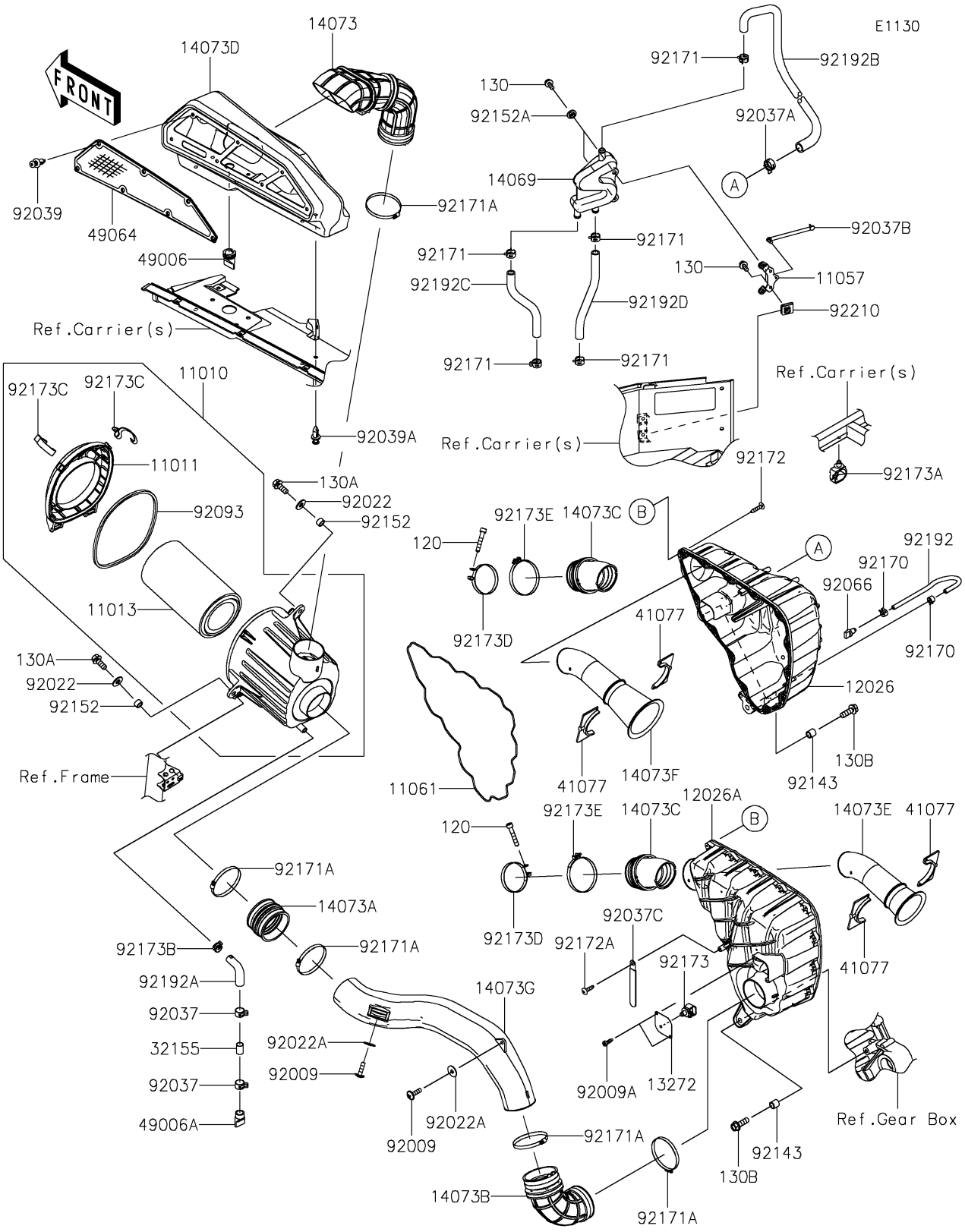

© 2026 Kawasaki Motors Corp., U.S.A.

2027 Teryx KRX4 1000 TR

PARTS LIST

Air Cleaner

ITEM NAME	PART NUMBER	QUANTITY
FILTER-ASSY-AIR (Ref # 11010)	11010-0900	1
CASE-AIR FILTER,UPP (Ref # 11011)	11011-0905	1
ELEMENT-AIR FILTER (Ref # 11013)	11013-0782	1
BRACKET,BREATHER (Ref # 11057)	11057-2431	1
GASKET,CHAMBER (Ref # 11061)	11061-1312	1
CHAMBER,RH (Ref # 12026)	12026-0019	1
CHAMBER,LH (Ref # 12026A)	12026-0020	1
PLATE,TEMP SENSOR (Ref # 13272)	13272-2711	1
BREATHER (Ref # 14069)	14069-0032	1
DUCT,INTAKE,DIRTYSIDE (Ref # 14073)	14073-0922	1
DUCT,A/F CASE (Ref # 14073A)	14073-0923	1
DUCT,CHAMBER (Ref # 14073B)	14073-0925	1
DUCT,CHAMBER-THROTTLE (Ref # 14073C)	14073-0931	2
DUCT,INTAKE,DIRTYSIDE BOX (Ref # 14073D)	14073-0954	1
DUCT,INTAKE,#1 CYLINDER (Ref # 14073E)	14073-0956	1
DUCT,INTAKE,#2 CYLINDER (Ref # 14073F)	14073-0957	1
DUCT,A/F CASE-CHAMBER (Ref # 14073G)	14073-0963	1
PIPE,DRAIN (Ref # 32155)	32155-4087	1
ADAPTER (Ref # 41077)	41077-0737	4
BOOT (Ref # 49006)	49006-0633	1
BOOT (Ref # 49006A)	49006-1292	1
FILTER-AIR (Ref # 49064)	49064-0012	1
SCREW,6X22 (Ref # 92009)	92009-1441	2
SCREW,TAPPING,5X16 (Ref # 92009A)	92009-1984	2
WASHER,8.5X20X1.6 (Ref # 92022)	92022-1561	2
WASHER,PLAIN,6.5X20X1 (Ref # 92022A)	92022-165	2
CLAMP,HOSE CLIP (Ref # 92037)	92037-1460	2
CLAMP (Ref # 92037A)	92037-1594	1
CLAMP,SPEED,L=80.5 (Ref # 92037B)	92037-1903	1

© 2026 Kawasaki Motors Corp., U.S.A.

2027 Teryx KRX4 1000 TR

PARTS LIST

Air Cleaner

ITEM NAME	PART NUMBER	QUANTITY
CLAMP (Ref # 92037C)	92037-1993	1
RIVET,TWO-PIECE CLIP (Ref # 92039)	92039-0818	7
RIVET (Ref # 92039A)	92039-0865	6
PLUG,DRAIN (Ref # 92066)	92066-0782	1
SEAL,AIR FILTER CASE (Ref # 92093)	92093-0726	1
COLLAR,8.8X12X11.5 (Ref # 92143)	92143-1340	3
COLLAR,8.8X12.3X6.9 (Ref # 92152)	92152-1853	2
COLLAR,6.5X10X5.3 (Ref # 92152A)	92152-1863	2
CLAMP (Ref # 92170)	92170-2042	2
CLAMP (Ref # 92171)	92171-0329	5
CLAMP (Ref # 92171A)	92171-1383	5
SCREW,TAPPING,5X25 (Ref # 92172)	92172-0432	13
SCREW,TAPPING,5X20 (Ref # 92172A)	92172-0483	1
CLAMP,12MM DIA. (Ref # 92173)	92173-0736	1
CLAMP (Ref # 92173A)	92173-0861	1
CLAMP (Ref # 92173B)	92173-1463	1
CLAMP,AIR FILTER CASE (Ref # 92173C)	92173-2023	2
CLAMP,74MM (Ref # 92173D)	92173-2219	2
CLAMP,88MM (Ref # 92173E)	92173-2256	2
TUBE,7X10X310 (Ref # 92192)	92192-1955	1
TUBE,DRAIN (Ref # 92192A)	92192-2312	1
TUBE,BREATHER-CHAMBER (Ref # 92192B)	92192-2337	1
TUBE,CYL.HEAD,RH-BREATHER,LH (Ref # 92192C)	92192-2338	1
TUBE,CYL.HEAD,LH-BREATHER,RH (Ref # 92192D)	92192-2339	1
NUT,CLIP,6MM (Ref # 92210)	92210-1768	2
BOLT-SOCKET,6X35 (Ref # 120)	120CA0635	2
BOLT-FLANGED,6X14 (Ref # 130)	130BA0614	4
BOLT-FLANGED,8X20 (Ref # 130A)	130BA0820	2
BOLT-FLANGED,8X25 (Ref # 130B)	130BA0825	3

© 2026 Kawasaki Motors Corp., U.S.A.