2027 Teryx KRX4 1000 TR

PARTS DIAGRAM

Cylinder/Piston(s)

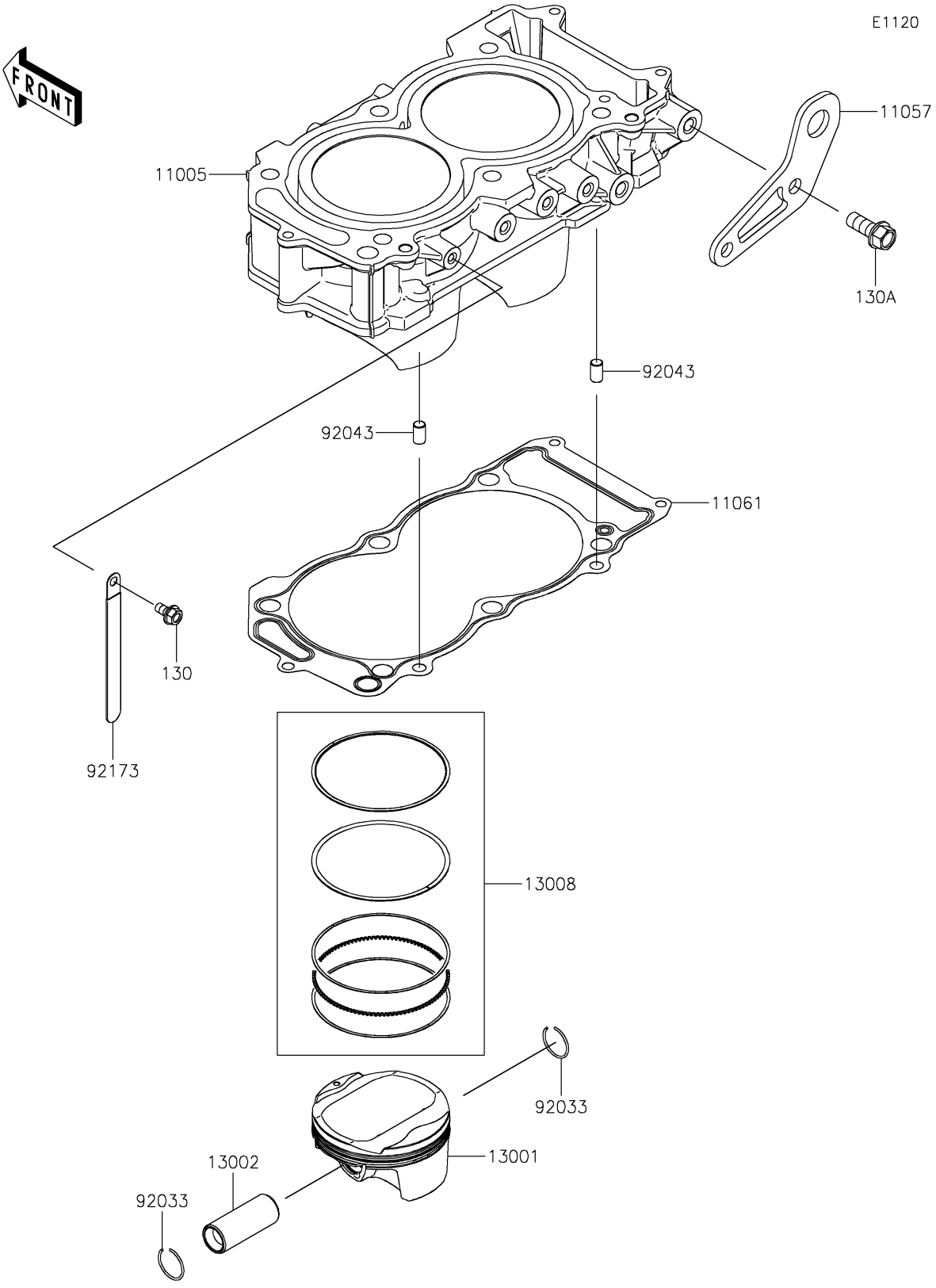

© 2026 Kawasaki Motors Corp., U.S.A.

2027 Teryx KRX4 1000 TR

PARTS LIST

Cylinder/Piston(s)

ITEM NAME	PART NUMBER	QUANTITY
CYLINDER-ENGINE (Ref # 11005)	11005-0695	1
BRACKET (Ref # 11057)	11057-2438	1
GASKET,CYLINDER BASE (Ref # 11061)	11061-1309	1
PISTON-ENGINE (Ref # 13001)	13001-0824	2
PIN-PISTON (Ref # 13002)	13002-0719	2
RING-SET-PISTON (Ref # 13008)	13008-0581	2
RING-SNAP (Ref # 92033)	92033-1188	4
PIN,8X14 (Ref # 92043)	92043-1567	2
CLAMP (Ref # 92173)	92173-0098	1
BOLT-FLANGED,6X12 (Ref # 130)	130BA0612	1
BOLT-FLANGED,10X25 (Ref # 130A)	130BA1025	2

© 2026 Kawasaki Motors Corp., U.S.A.