2026 Ultra 160LX-S Angler

PARTS DIAGRAM

Pads(CTFNN)

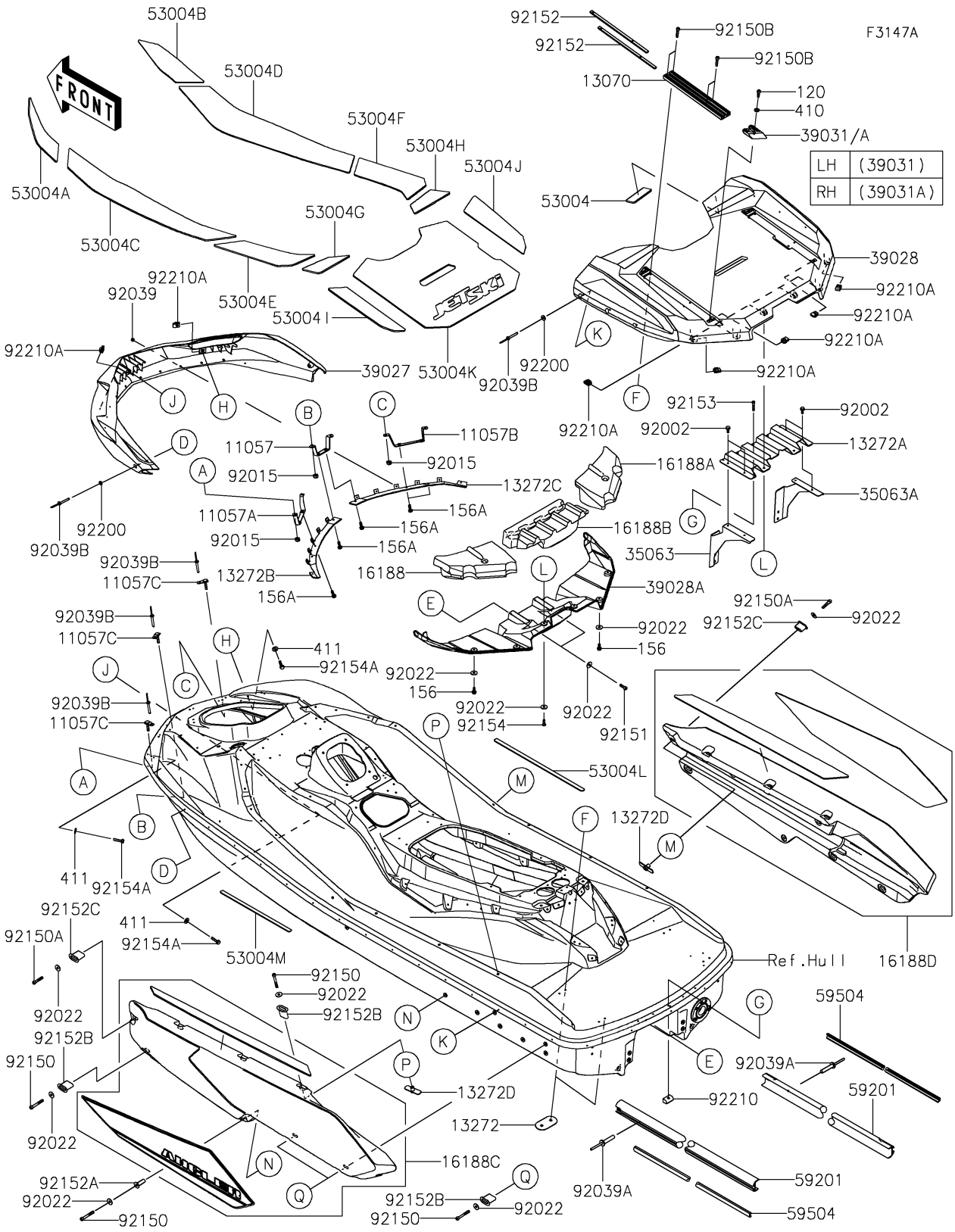

© 2026 Kawasaki Motors Corp., U.S.A.

2026 Ultra 160LX-S Angler

PARTS LIST

Pads(CTFNN)

ITEM NAME	PART NUMBER	QUANTITY
BRACKET,FR BUMPER,CNT (Ref # 11057)	11057-7809	1
BRACKET,FR BUMPER,LH (Ref # 11057A)	11057-7810	1
BRACKET,FR BUMPER,RH (Ref # 11057B)	11057-7811	1
BRACKET,FR (Ref # 11057C)	11057-7812	6
GUIDE,RR (Ref # 13070)	13070-0974	2
PLATE,GUIDE (Ref # 13272)	13272-3849	4
PLATE,RR,INSIDE (Ref # 13272A)	13272-3873	1
PLATE,FR BUMPER,LH (Ref # 13272B)	13272-3984	1
PLATE,FR BUMPER,RH (Ref # 13272C)	13272-3985	1
PLATE,FLOAT (Ref # 13272D)	13272-7088	8
FLOAT,RR,LH (Ref # 16188)	16188-0066	1
FLOAT,RR,RH (Ref # 16188A)	16188-0067	1
FLOAT,RR,CNT (Ref # 16188B)	16188-0068	1
FLOAT,LH,W/MAT (Ref # 16188C)	16188-0159	1
FLOAT,RH,W/MAT (Ref # 16188D)	16188-0160	1
STAY,RR,LH (Ref # 35063)	35063-1567	1
STAY,RR,RH (Ref # 35063A)	35063-1569	1
BUMPER-FRONT,BLACK (Ref # 39027)	39027-0004-6Z	1
BUMPER-REAR,UPP,BLACK (Ref # 39028)	39028-0006-6Z	1
BUMPER-REAR,LWR,BLACK (Ref # 39028A)	39028-0007-6Z	1
CAP-END,LH,BLACK (Ref # 39031)	39031-0025-6Z	1
CAP-END,RH,BLACK (Ref # 39031A)	39031-0026-6Z	1
MAT,50X135X6 (Ref # 53004)	53004-0694	2
MAT,FLOOR,FR,LH (Ref # 53004A)	53004-0704	1
MAT,FLOOR,FR,RH (Ref # 53004B)	53004-0705	1
MAT,FLOOR,MIDDLE,LH (Ref # 53004C)	53004-0706	1
MAT,FLOOR,MIDDLE,RH (Ref # 53004D)	53004-0707	1
MAT,FLOOR,RR,LH (Ref # 53004E)	53004-0708	1
MAT,FLOOR,RR,RH (Ref # 53004F)	53004-0709	1

© 2026 Kawasaki Motors Corp., U.S.A.

2026 Ultra 160LX-S Angler

PARTS LIST

Pads(CTFNN)

ITEM NAME	PART NUMBER	QUANTITY
MAT,DECK,FR,LH (Ref # 53004G)	53004-0710	1
MAT,DECK,FR,RH (Ref # 53004H)	53004-0711	1
MAT,DECK,LH (Ref # 53004I)	53004-0712	1
MAT,DECK,RH (Ref # 53004J)	53004-0713	1
MAT,DECK,CNT (Ref # 53004K)	53004-0714	1
MAT,DECK,FR,UPP (Ref # 53004L)	53004-0780	1
MAT,DECK,LH,FR,UPP (Ref # 53004M)	53004-0784	1
BUMPER,SIDE,BLACK (Ref # 59201)	59201-0008-6Z	2
INSERT-BOAT FENDER,SIDE,F.SIL (Ref # 59504)	59504-0002-AG	2
BOLT,6X16 (Ref # 92002)	92002-3728	4
NUT,LOCK,6MM (Ref # 92015)	92015-3766	6
WASHER,6.5X20X1.5 (Ref # 92022)	92022-3710	24
RIVET (Ref # 92039)	92039-3733	12
RIVET (Ref # 92039A)	92039-3771	22
RIVET (Ref # 92039B)	92039-3773	14
BOLT,SOCKET,6X50 (Ref # 92150)	92150-1436	14
BOLT,SOCKET,6X35 (Ref # 92150A)	92150-1887	2
BOLT,SOCKET,6X30 (Ref # 92150B)	92150-3822	8
BOLT,SOCKET,6X20 (Ref # 92151)	92151-3774	2
COLLAR,GUIDE (Ref # 92152)	92152-2815	4
COLLAR,FLOAT,LWR (Ref # 92152A)	92152-3805	2
COLLAR,FLOAT,UPP (Ref # 92152B)	92152-3807	12
COLLAR,FLOAT,FR (Ref # 92152C)	92152-3809	2
BOLT,SOCKET,5X30 (Ref # 92153)	92153-3742	5
BOLT,SOCKET,6X18 (Ref # 92154)	92154-4447	2
BOLT,FLANGED,6X28 (Ref # 92154A)	92154-4484	3
WASHER,5X12X1 (Ref # 92200)	92200-3796	8
NUT (Ref # 92210)	92210-1892	5
NUT,6MM (Ref # 92210A)	92210-3768	10

© 2026 Kawasaki Motors Corp., U.S.A.

2026 Ultra 160LX-S Angler

PARTS LIST

Pads(CTFNN)

ITEM NAME	PART NUMBER	QUANTITY
BOLT-SOCKET,6X20 (Ref # 120)	120R0620	2
BOLT-WP,6X16 (Ref # 156)	156R0616	4
BOLT-WP,6X18 (Ref # 156A)	156R0618	6
WASHER-PLAIN-SMALL,6MM (Ref # 410)	410S0600	2
WASHER-PLAIN,6MM (Ref # 411)	411S0600	3

© 2026 Kawasaki Motors Corp., U.S.A.