2027 KLX110

PARTS DIAGRAM

Suspension/Shock Absorber

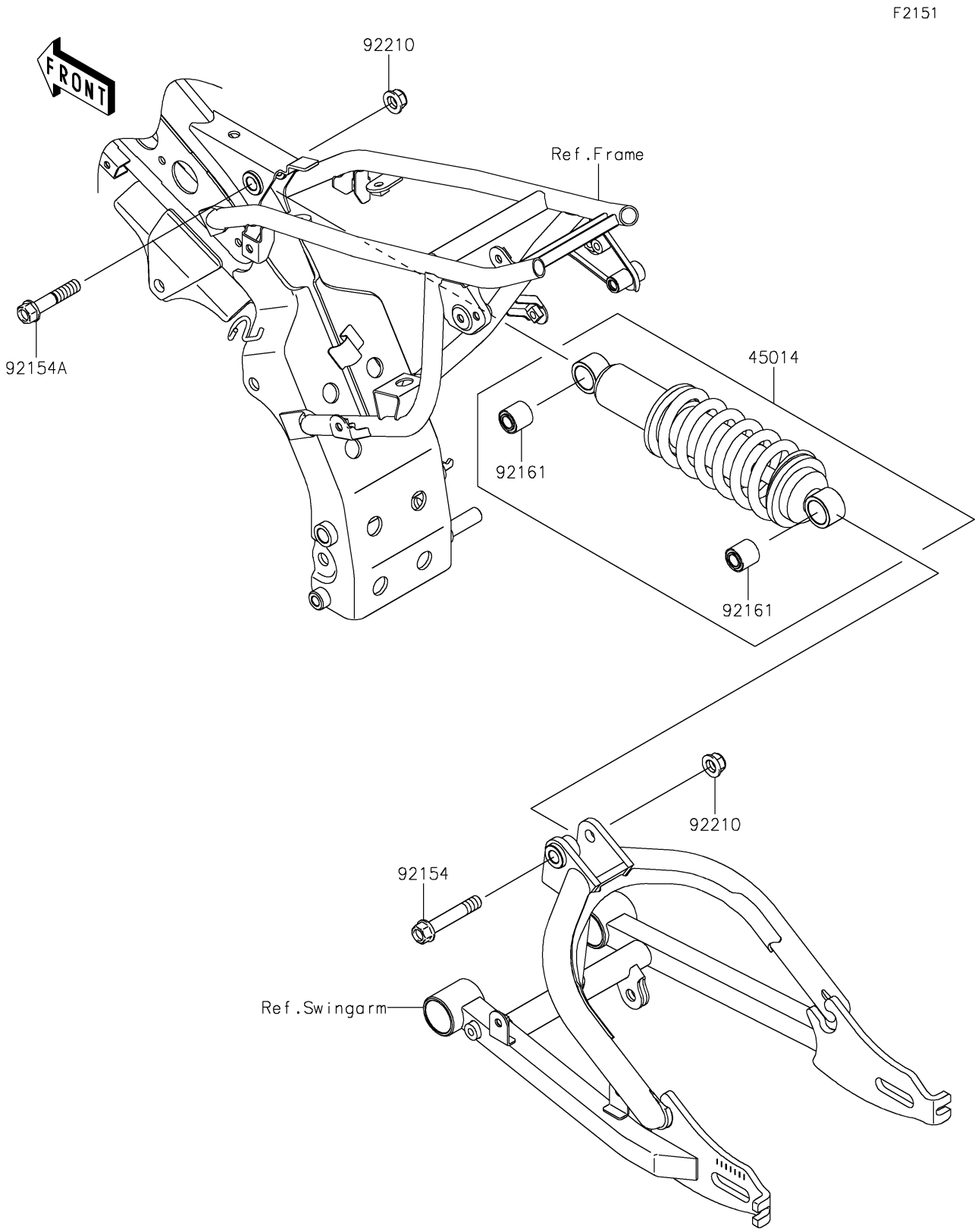

© 2026 Kawasaki Motors Corp., U.S.A.

2027 KLX110

PARTS LIST

Suspension/Shock Absorber

ITEM NAME	PART NUMBER	QUANTITY
SHOCKABSORBER,BLACK (Ref # 45014)	45014-0675-10	1
BOLT,FLANGED,10X57 (Ref # 92154)	92154-2854	1
BOLT,FLANGED,10X50 (Ref # 92154A)	92154-2855	1
DAMPER,SHOCKABSORBER (Ref # 92161)	92161-0100	2
NUT,LOCK,FLANGED,10MM (Ref # 92210)	92210-1080	2

© 2026 Kawasaki Motors Corp., U.S.A.