2026 VULCAN® S

PARTS DIAGRAM

Front Wheel

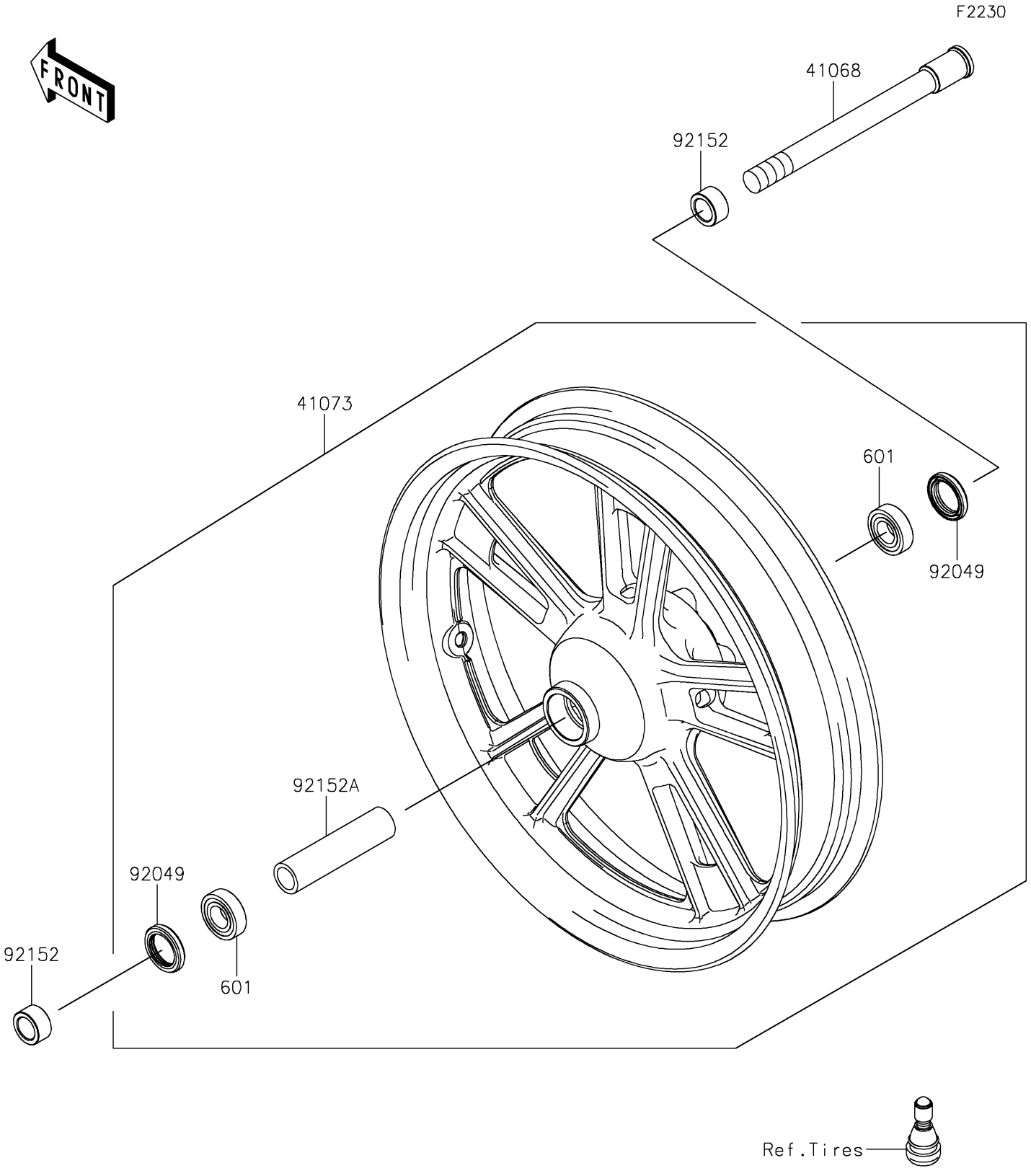

© 2026 Kawasaki Motors Corp., U.S.A.

2026 VULCAN® S

PARTS LIST

Front Wheel

ITEM NAME	PART NUMBER	QUANTITY
AXLE,FR (Ref # 41068)	41068-0059	1
WHEEL-ASSY,FR,G.BLACK (Ref # 41073)	41073-0653-QT	1
SEAL-OIL,BJN30427 (Ref # 92049)	92049-0130	2
COLLAR,20X30X15.5 (Ref # 92152)	92152-0946	2
COLLAR,20.2X28X115 (Ref # 92152A)	92152-0958	1
BEARING-BALL,#6004UUC3 (Ref # 601)	601B6004UU	2

© 2026 Kawasaki Motors Corp., U.S.A.