# 2026 VULCAN® S

## PARTS DIAGRAM

### Ignition System

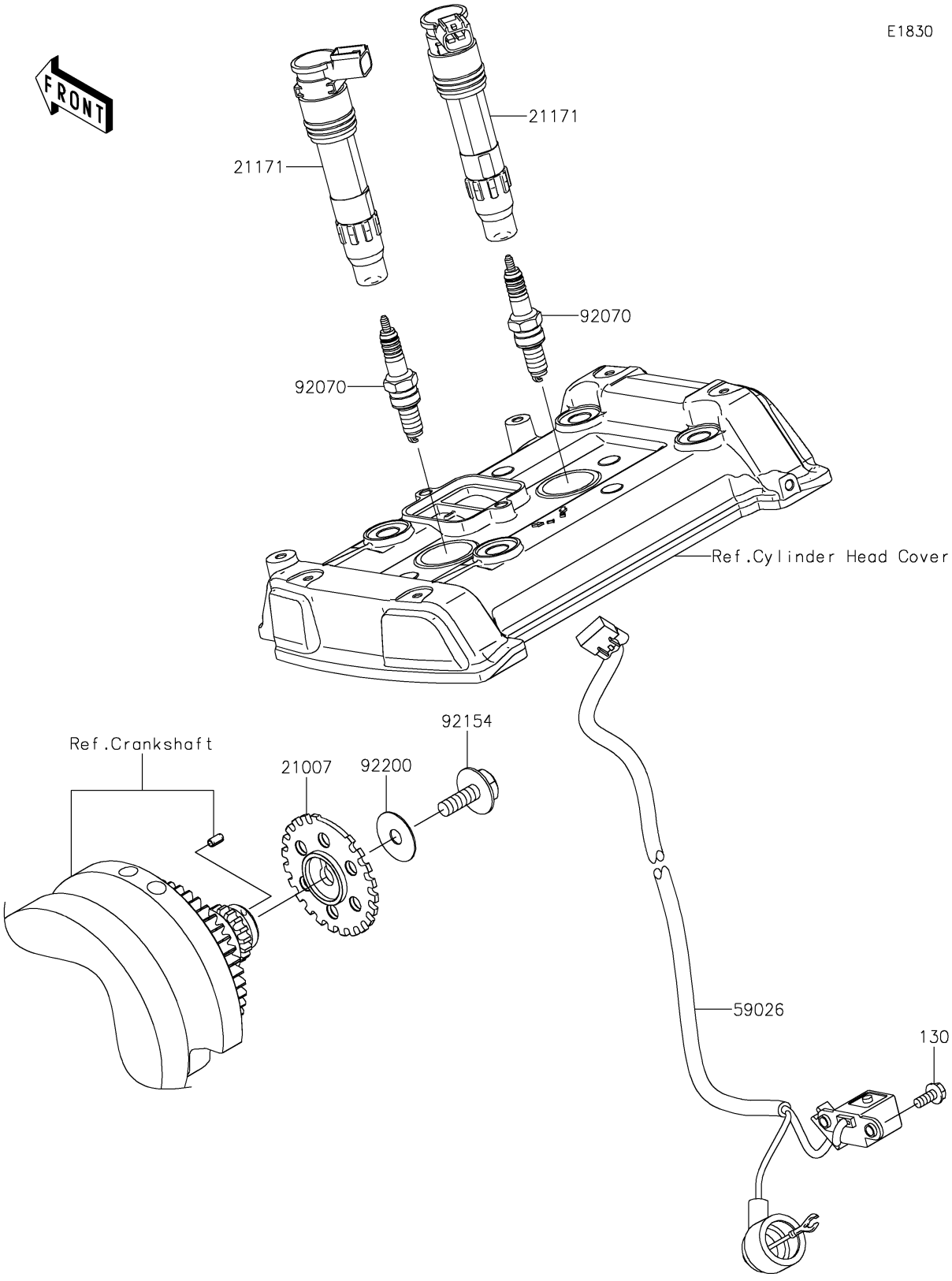


© 2026 Kawasaki Motors Corp., U.S.A.

# 2026 VULCAN® S

## PARTS LIST

### Ignition System

| ITEM NAME | PART NUMBER | QUANTITY |
|---|---|---|
| ROTOR (Ref # 21007) | 21007-0623 | 1 |
| COIL-ASSY-IGNITION (Ref # 21171) | 21171-0033 | 2 |
| COIL-PULSING (Ref # 59026) | 59026-0040 | 1 |
| PLUG-SPARK,CR9EIA(NGK) (Ref # 92070) | 92070-0014 | 2 |
| BOLT,FLANGED,8X23 (Ref # 92154) | 92154-0187 | 1 |
| WASHER,8.5X28X0.8 (Ref # 92200) | 92200-0274 | 1 |
| BOLT-FLANGED,5X12 (Ref # 130) | 130BA0512 | 2 |

© 2026 Kawasaki Motors Corp., U.S.A.