2026 MULE PRO-FXT™ 1000 LE RANCH EDITION

Kawasaki
Let the Good Times Roll®

PARTS DIAGRAM

Radiator

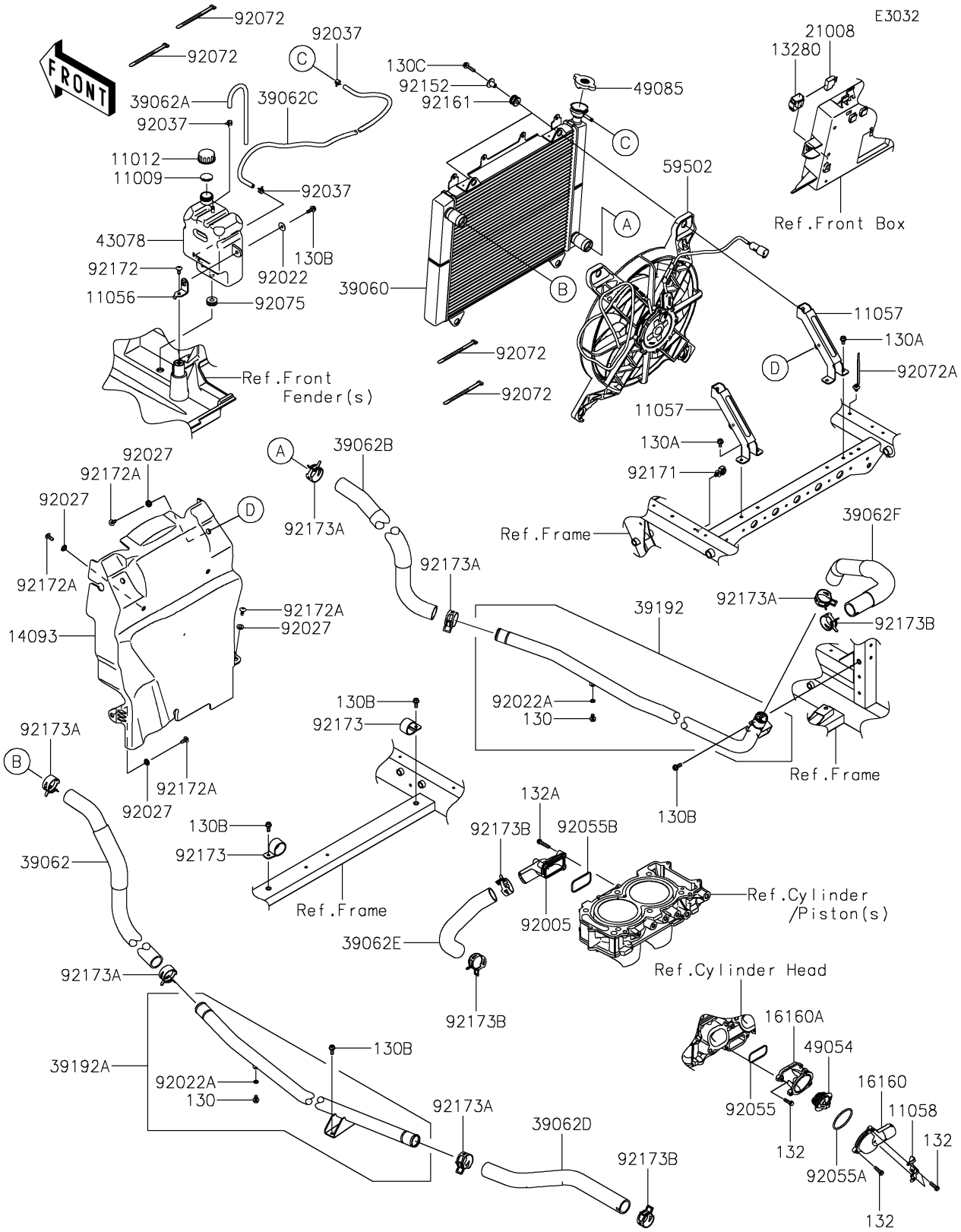

© 2026 Kawasaki Motors Corp., U.S.A.

2026 MULE PRO-FXT™ 1000 LE RANCH EDITION

Kawasaki
Let the Good Times Roll®

PARTS LIST

Radiator

ITEM NAME	PART NUMBER	QUANTITY

© 2026 Kawasaki Motors Corp., U.S.A.