2026 RIDGE CREW

PARTS DIAGRAM

Door(Front)

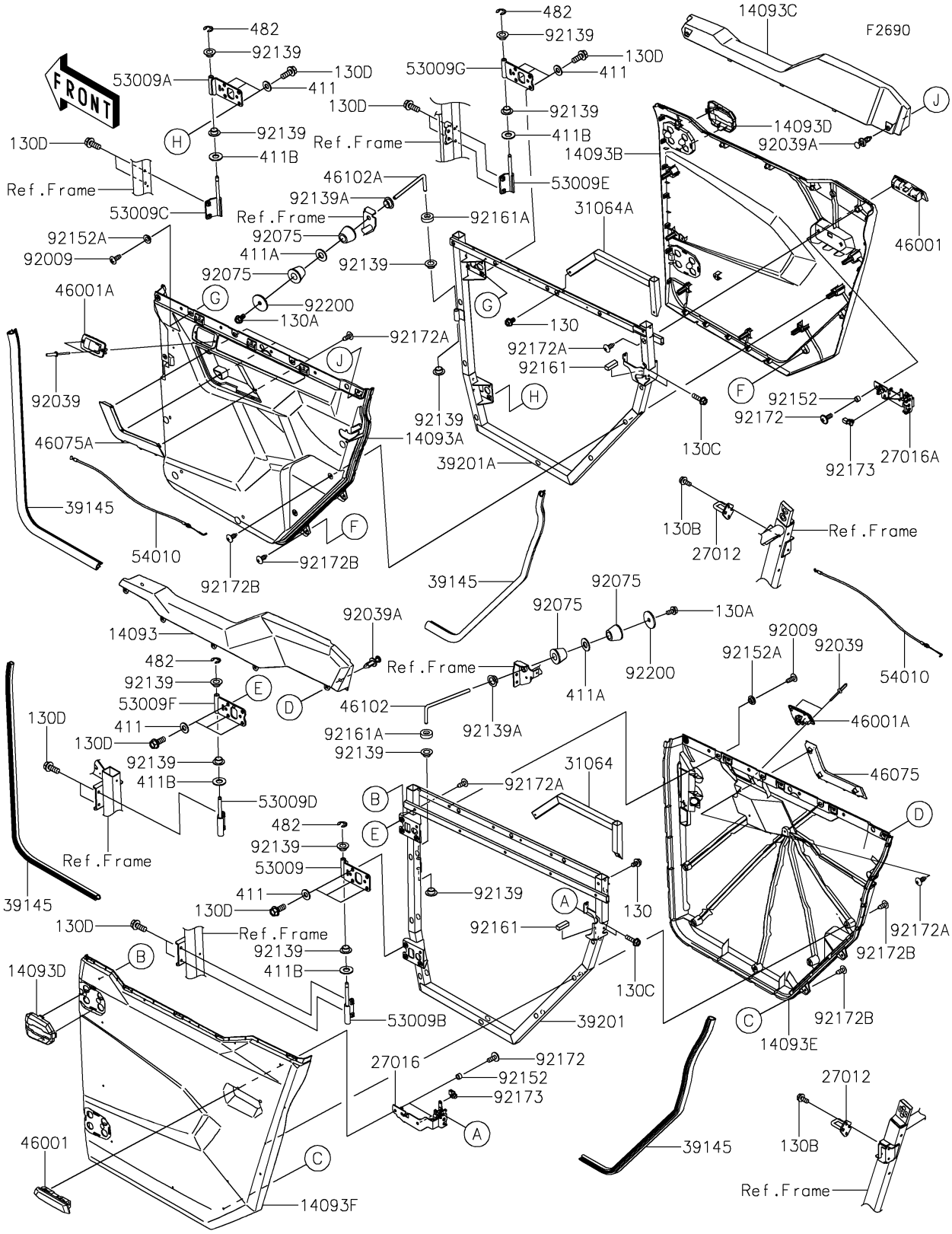

© 2026 Kawasaki Motors Corp., U.S.A.

2026 RIDGE CREW

PARTS LIST

Door(Front)

ITEM NAME	PART NUMBER	QUANTITY

© 2026 Kawasaki Motors Corp., U.S.A.