2026 RIDGE CREW

PARTS DIAGRAM

Drive Shaft-Propeller

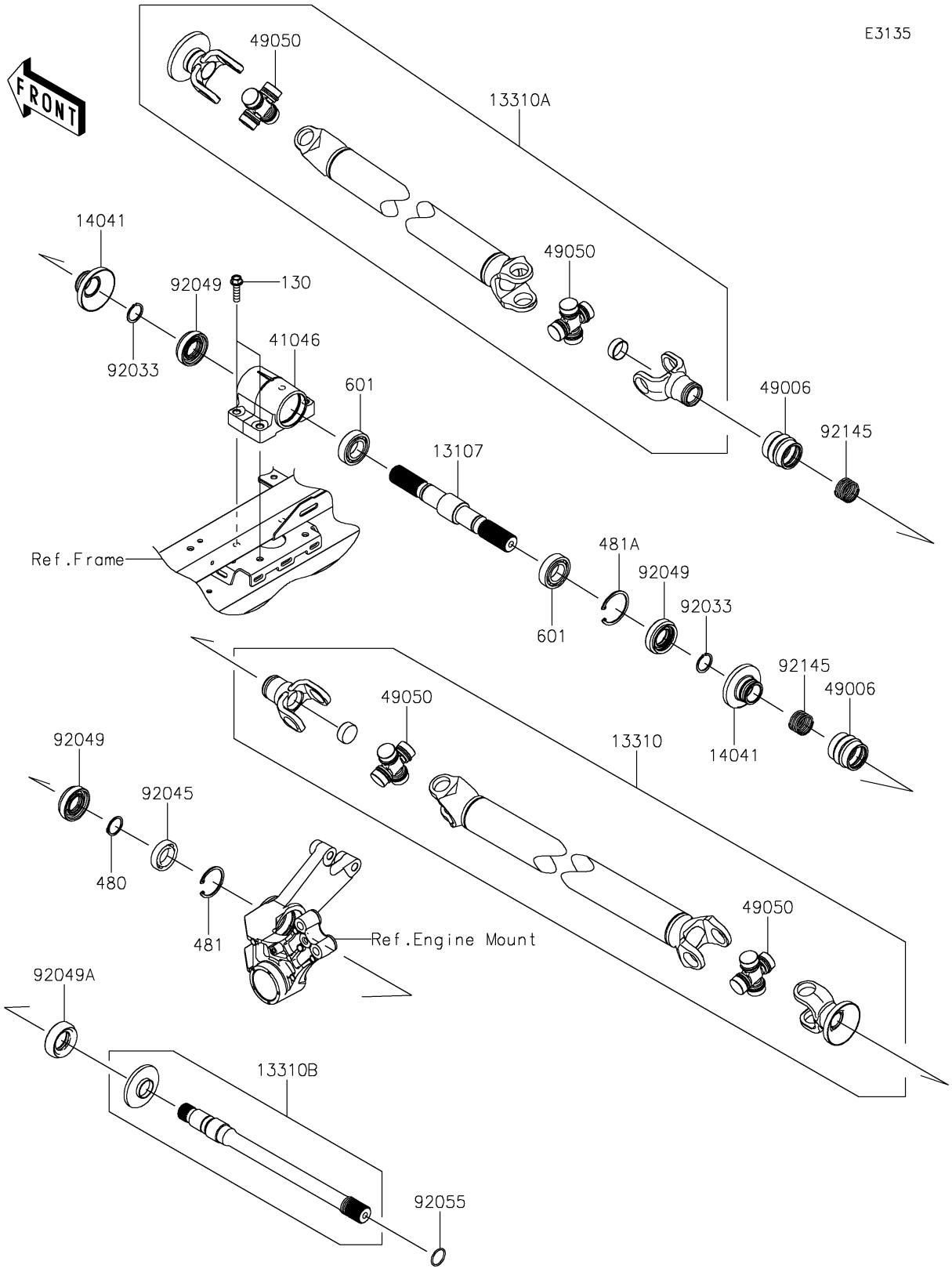

© 2026 Kawasaki Motors Corp., U.S.A.

2026 RIDGE CREW

PARTS LIST

Drive Shaft-Propeller

ITEM NAME	PART NUMBER	QUANTITY
SHAFT (Ref # 13107)	13107-1544	1
SHAFT-ASSY,PROPELLER,RR (Ref # 13310)	13310-0587	1
SHAFT-ASSY,PROPELLER,FR (Ref # 13310A)	13310-0588	1
SHAFT-ASSY (Ref # 13310B)	13310-0589	1
COVER-COMP (Ref # 14041)	14041-0631	2
HOUSING-BEARING (Ref # 41046)	41046-0042	1
BOOT (Ref # 49006)	49006-0646	2
SPIDER (Ref # 49050)	49050-0034	4
RING-SNAP,25MM (Ref # 92033)	92033-1172	2
BEARING-BALL,#6905 (Ref # 92045)	92045-036	1
SEAL-OIL,TC9Y 25X48X10X17.2 (Ref # 92049)	92049-0817	3
SEAL-OIL,TC9Y 28X50X10X17.2 (Ref # 92049A)	92049-0818	1
RING-O,22.1X1.9 (Ref # 92055)	92055-1617	1
SPRING (Ref # 92145)	92145-1838	2
BOLT-FLANGED,8X30 (Ref # 130)	130BA0830	4
CIRCLIP-TYPE-C,25MM (Ref # 480)	480J2500	1
CIRCLIP-TYPE-C,42MM (Ref # 481)	481J4200	1
CIRCLIP-TYPE-C,47MM (Ref # 481A)	481J4700	1
BEARING-BALL (Ref # 601)	601A6005	2

© 2026 Kawasaki Motors Corp., U.S.A.