2026 RIDGE CREW

PARTS DIAGRAM

Fuel Evaporative System(CA)

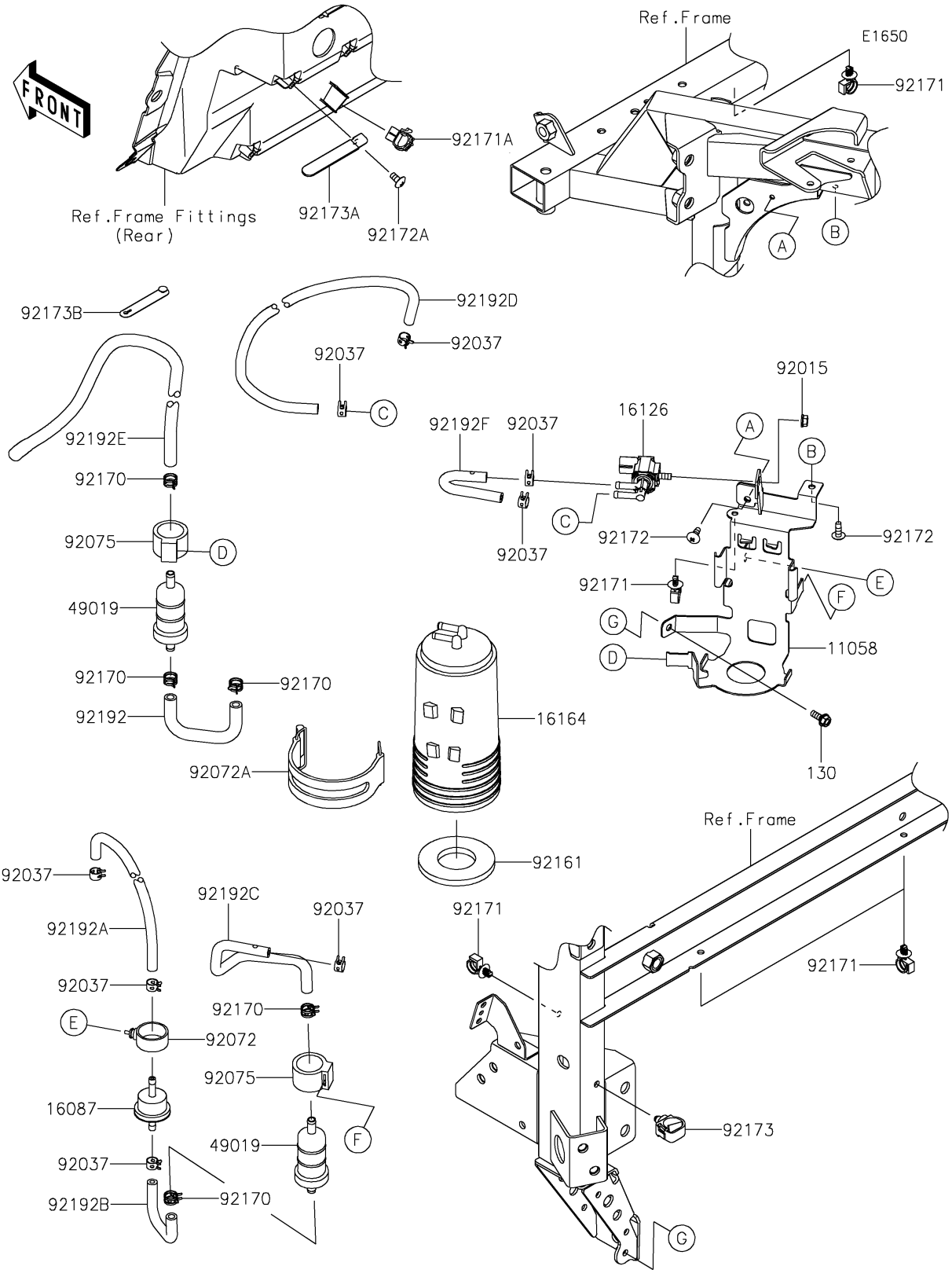

© 2026 Kawasaki Motors Corp., U.S.A.

2026 RIDGE CREW

PARTS LIST

Fuel Evaporative System(CA)

ITEM NAME	PART NUMBER	QUANTITY
BRACKET (Ref # 11058)	11058-2123	1
VALVE-CHECK (Ref # 16087)	16087-0011	1
VALVE,SOLENOID (Ref # 16126)	16126-0705	1
CANISTER (Ref # 16164)	16164-0016	1
FILTER-FUEL (Ref # 49019)	49019-0032	2
NUT,FLANGED,6MM (Ref # 92015)	92015-1367	1
CLAMP (Ref # 92037)	92037-2113	8
BAND (Ref # 92072)	92072-0852	1
BAND,L=168 (Ref # 92072A)	92072-1306	1
DAMPER,FUEL FILTER (Ref # 92075)	92075-1853	2
DAMPER (Ref # 92161)	92161-1843	1
CLAMP (Ref # 92170)	92170-2082	5
CLAMP (Ref # 92171)	92171-0453	5
CLAMP,EDGE CLIP (Ref # 92171A)	92171-1722	1
SCREW,TAPPING,6X16 (Ref # 92172)	92172-0739	2
SCREW,6X12 (Ref # 92172A)	92172-0884	1
CLAMP (Ref # 92173)	92173-0861	1
CLAMP (Ref # 92173A)	92173-1056	1
CLAMP (Ref # 92173B)	92173-2199	1
TUBE,FILTER-CANISTER (Ref # 92192)	92192-1665	1
TUBE,TANK-VALVE CHECK (Ref # 92192A)	92192-2653	1
TUBE,VALVE CHECK-FILTER AIR (Ref # 92192B)	92192-2654	1
TUBE,FILTER AIR-CANISTER (Ref # 92192C)	92192-2655	1
TUBE,PURGE VALVE-IN MANIFOLD (Ref # 92192D)	92192-2657	1
TUBE,FILTER AIR-OUTSIDE (Ref # 92192E)	92192-2658	1
TUBE,CANISTER-PURGE VALVE (Ref # 92192F)	92192-2798	1
BOLT-FLANGED,6X16 (Ref # 130)	130BA0616	1

© 2026 Kawasaki Motors Corp., U.S.A.