2008 KFX®450R

PARTS DIAGRAM

Cylinder Head Cover

E1112

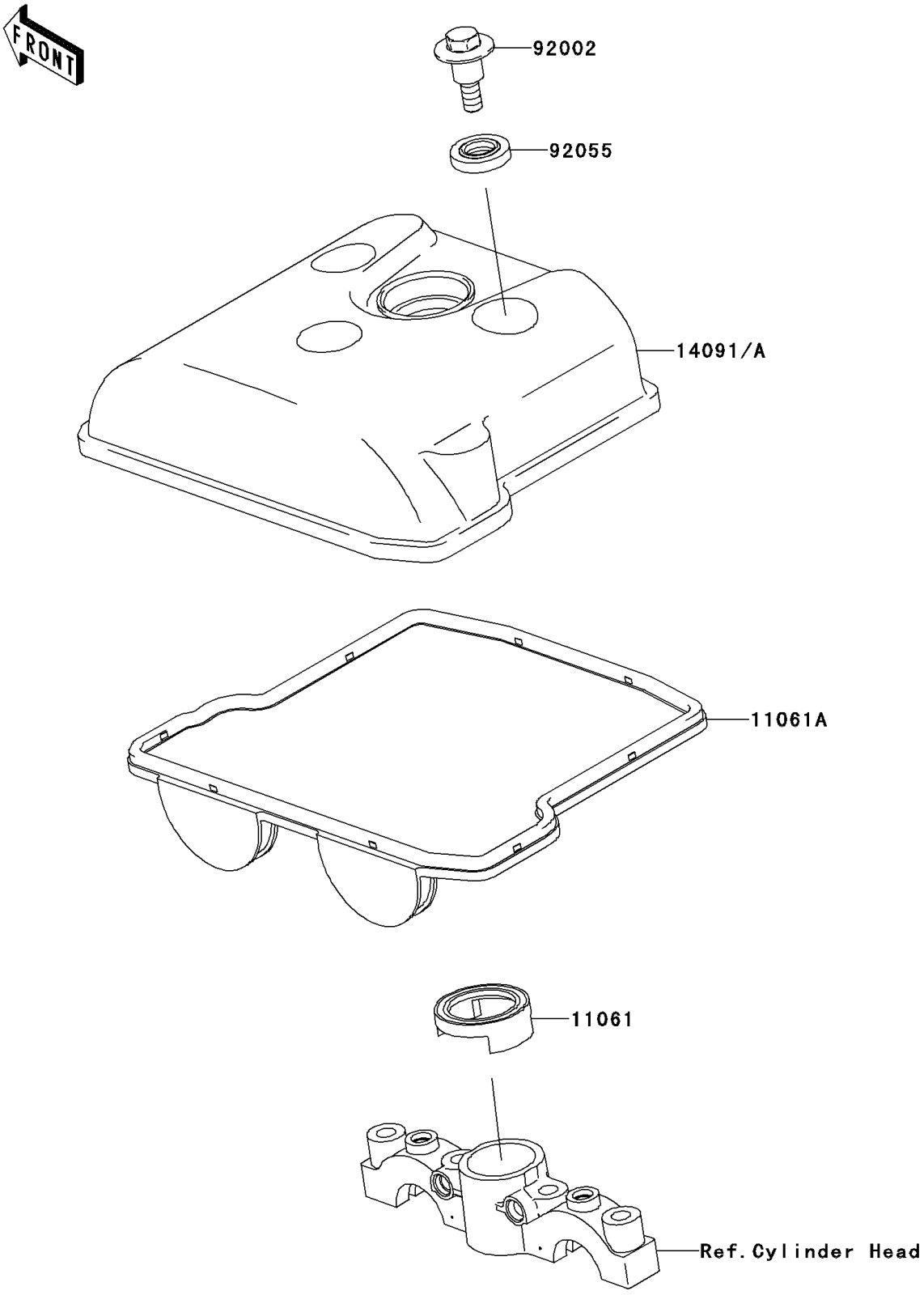

© 2026 Kawasaki Motors Corp., U.S.A.

2008 KFX®450R

PARTS LIST

Cylinder Head Cover

ITEM NAME	PART NUMBER	QUANTITY

© 2026 Kawasaki Motors Corp., U.S.A.