2026 RIDGE® PLATINUM RANCH EDITION HVAC

Kawasaki
Let the Good Times Roll®

PARTS DIAGRAM

Headlight(s)

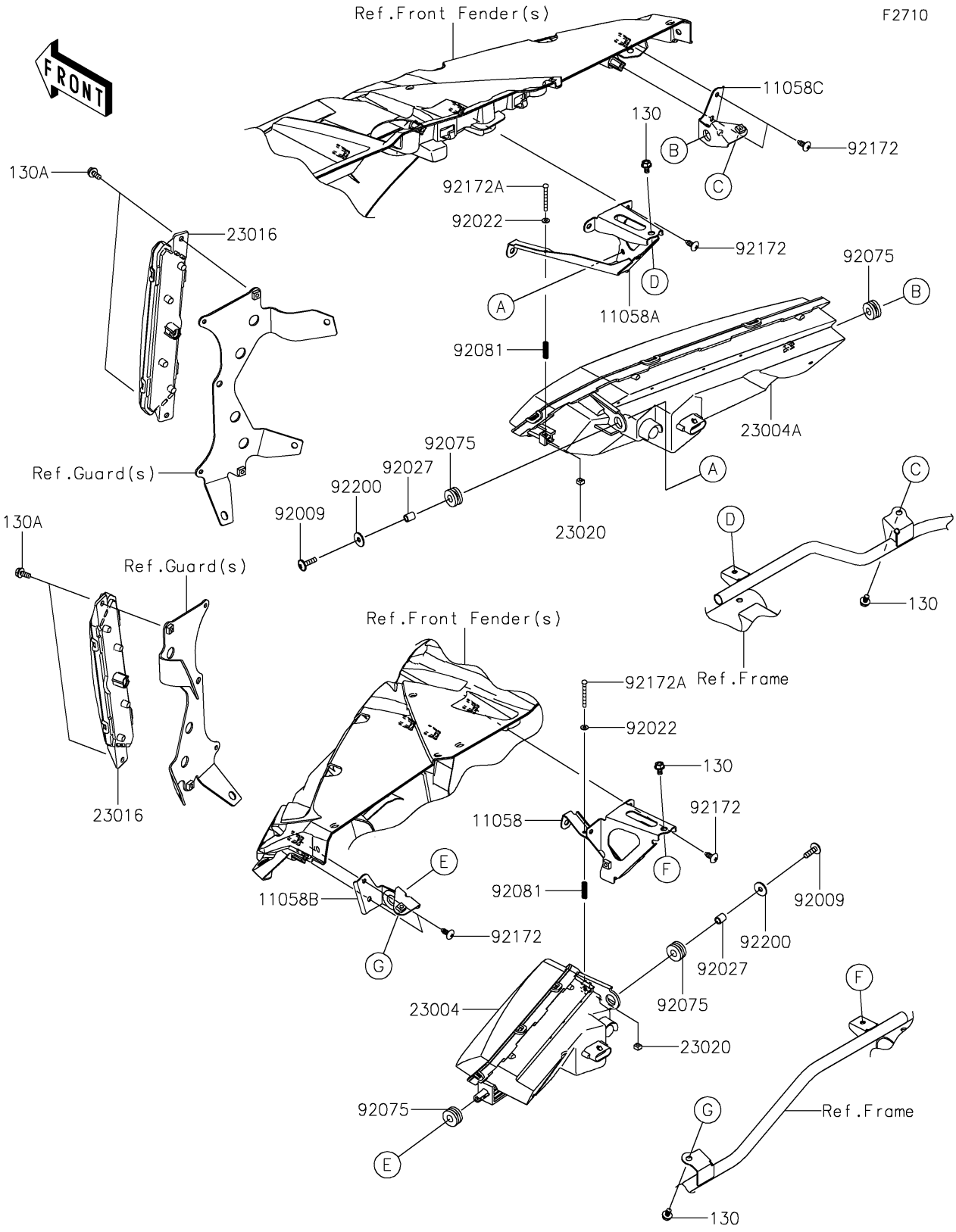

© 2026 Kawasaki Motors Corp., U.S.A.

2026 RIDGE® PLATINUM RANCH EDITION HVAC

Kawasaki
Let the Good Times Roll®

PARTS LIST

Headlight(s)

ITEM NAME	PART NUMBER	QUANTITY
BRACKET,HEAD LAMP,LH,IN (Ref # 11058)	11058-0218	1
BRACKET,HEAD LAMP,RH,IN (Ref # 11058A)	11058-0219	1
BRACKET,HEAD LAMP,LH,OUT (Ref # 11058B)	11058-0220	1
BRACKET,HEAD LAMP,RH,OUT (Ref # 11058C)	11058-0221	1
LAMP-HEAD,LED,LH (Ref # 23004)	23004-0435	1
LAMP-HEAD,LED,RH (Ref # 23004A)	23004-0436	1
LAMP-ASSY,LED,CLEAR (Ref # 23016)	23016-0677	2
NUT,4MM,FOCUS ADJUST (Ref # 23020)	23020-018	2
SCREW,6X22,BLACK (Ref # 92009)	92009-1256	2
WASHER (Ref # 92022)	92022-563	2
COLLAR,6.8X10X12 (Ref # 92027)	92027-162	2
DAMPER,10X24X12 (Ref # 92075)	92075-1690	4
SPRING,FOCUS ADJUST (Ref # 92081)	92081-1896	2
SCREW,6X16 (Ref # 92172)	92172-0284	10
SCREW,4X40 (Ref # 92172A)	92172-1092	2
WASHER,6.5X20X1.6 (Ref # 92200)	92200-0283	2
BOLT-FLANGED,6X10 (Ref # 130)	130BA0610	4
BOLT-FLANGED,6X14 (Ref # 130A)	130BA0614	4

© 2026 Kawasaki Motors Corp., U.S.A.