2026 RIDGE Platinum Ranch Edition HVAC

PARTS DIAGRAM

Radiator

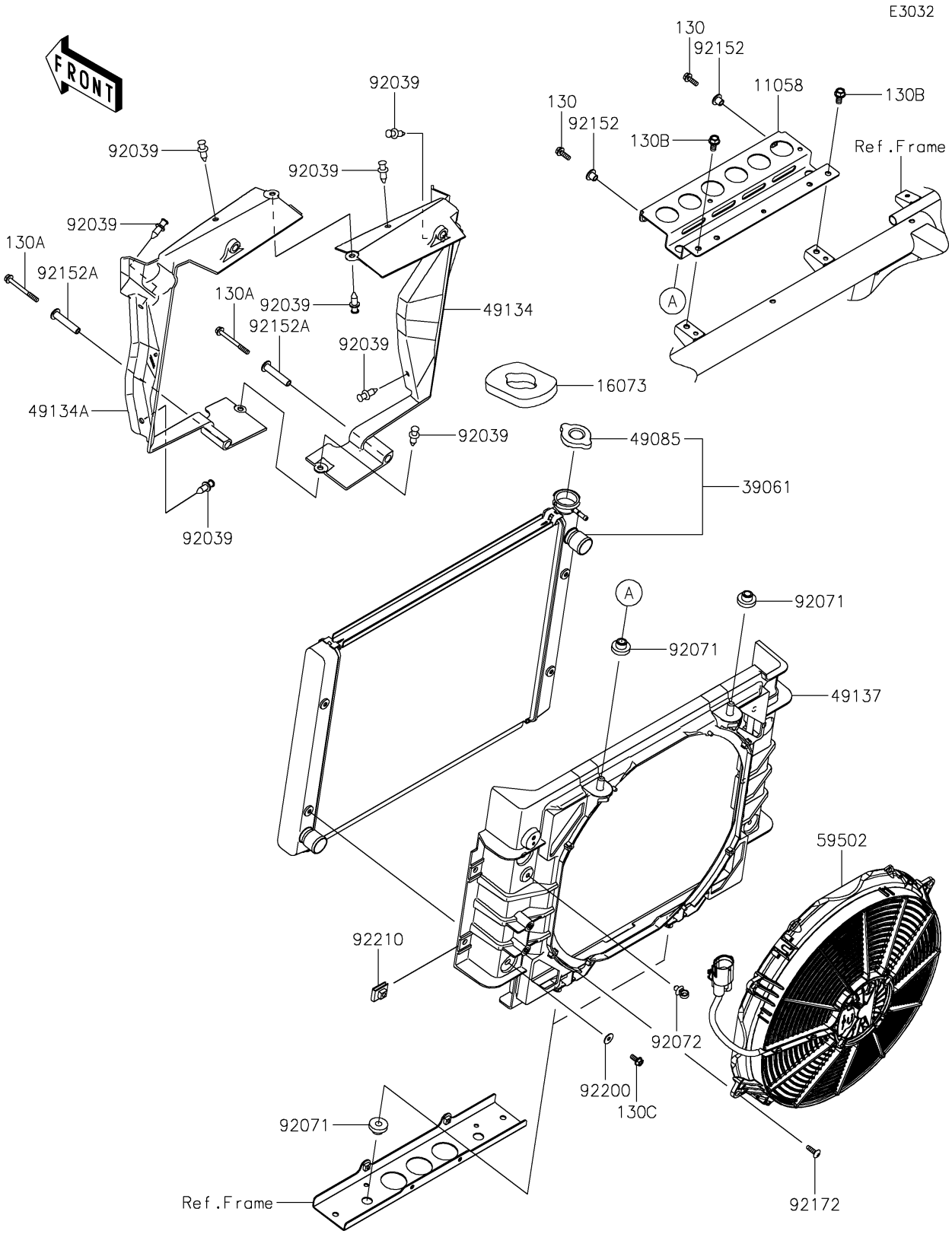

© 2026 Kawasaki Motors Corp., U.S.A.

2026 RIDGE Platinum Ranch Edition HVAC

Kawasaki
Let the Good Times Roll®

PARTS LIST

Radiator

ITEM NAME	PART NUMBER	QUANTITY
BRACKET,RADIATOR (Ref # 11058)	11058-1410	1
INSULATOR,RADIATOR CAP (Ref # 16073)	16073-0961	1
RADIATOR-ASSY (Ref # 39061)	39061-0998	1
CAP-ASSY-PRESSURE (Ref # 49085)	49085-0005	1
SHROUD,RH (Ref # 49134)	49134-0020	1
SHROUD,LH (Ref # 49134A)	49134-0021	1
SHROUD,FAN (Ref # 49137)	49137-0009	1
FAN-ASSY (Ref # 59502)	59502-0640	1
RIVET (Ref # 92039)	92039-0776	8
GROMMET (Ref # 92071)	92071-0827	4
BAND,OS170-FT7(BLACK) (Ref # 92072)	92072-1414	1
COLLAR (Ref # 92152)	92152-2922	2
COLLAR (Ref # 92152A)	92152-2923	2
SCREW,TAPPING,6X20 (Ref # 92172)	92172-0488	4
WASHER,6.1X18X1.0 (Ref # 92200)	92200-2125	4
NUT (Ref # 92210)	92210-0774	4
BOLT-FLANGED,6X18 (Ref # 130)	130BA0618	2
BOLT-FLANGED,6X60 (Ref # 130A)	130BA0660	2
BOLT-FLANGED,8X16 (Ref # 130B)	130BA0816	2
BOLT-FLANGED,6X14 (Ref # 130C)	130CA0614	4

© 2026 Kawasaki Motors Corp., U.S.A.