2026 RIDGE® PLATINUM RANCH EDITION HVAC

Kawasaki
Let the Good Times Roll®

PARTS DIAGRAM

Crankshaft

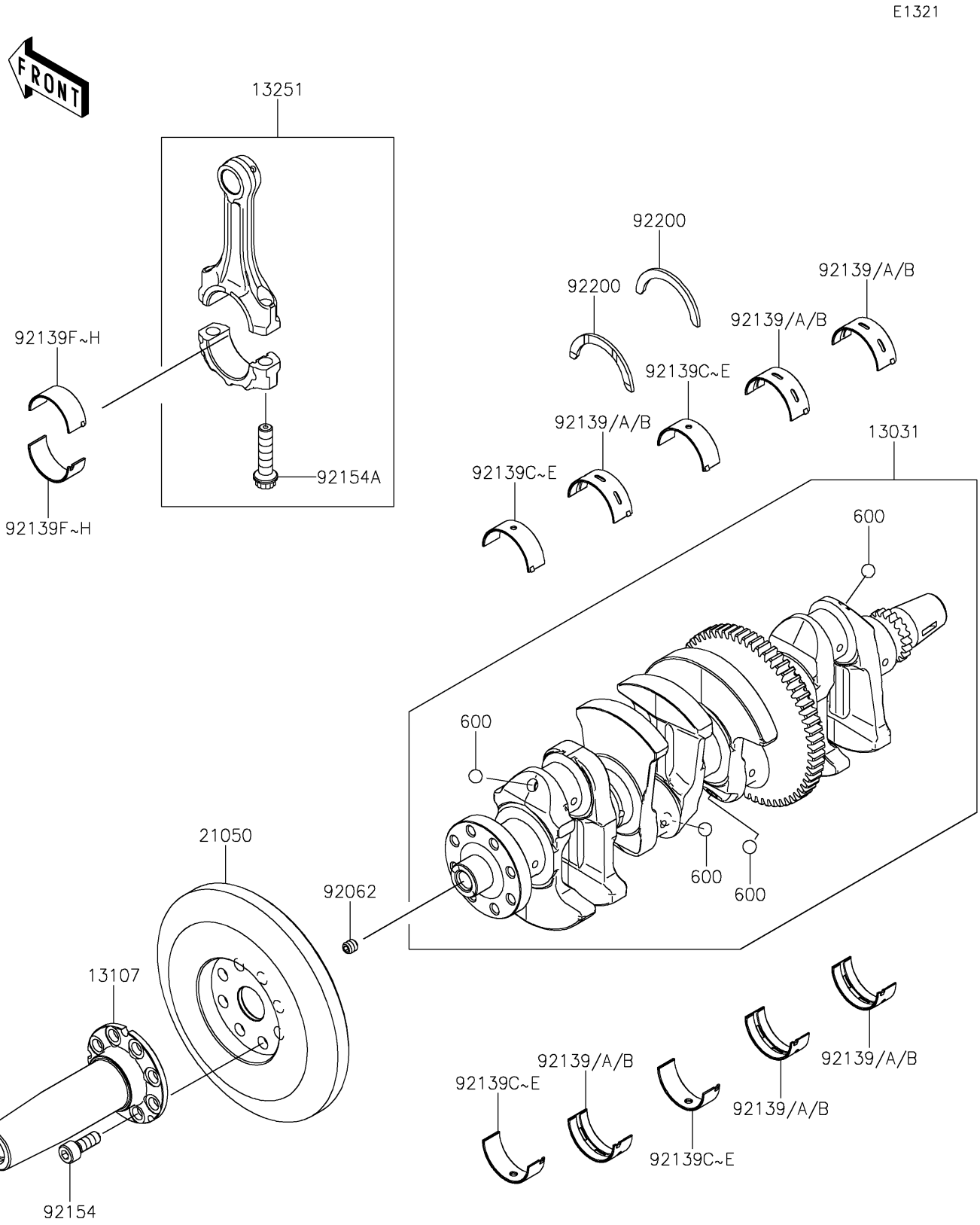

© 2026 Kawasaki Motors Corp., U.S.A.

2026 RIDGE® PLATINUM RANCH EDITION HVAC

Kawasaki
Let the Good Times Roll®

PARTS LIST

Crankshaft

ITEM NAME	PART NUMBER	QUANTITY
CRANKSHAFT-COMP (Ref # 13031)	13031-1530	1
SHAFT,CONVERTER (Ref # 13107)	13107-0997	1
ROD-ASSY-CONNECTING,H (Ref # 13251)	13251-0751-HH	4
FLYWHEEL (Ref # 21050)	21050-0035	1
NOZZLE (Ref # 92062)	92062-1053	1
BUSHING,#2&#4&#5,BLUE (Ref # 92139)	92139-1265	6
BUSHING,#2&#4&#5,BLACK (Ref # 92139A)	92139-1266	AR
BUSHING,#2&#4&#5,BROWN (Ref # 92139B)	92139-1267	AR
BUSHING,#1&#3,BLUE (Ref # 92139C)	92139-1268	4
BUSHING,#1&#3,BLACK (Ref # 92139D)	92139-1269	AR
BUSHING,#1&#3,BROWN (Ref # 92139E)	92139-1270	AR
BUSHING,CONNECTING ROD,BLUE (Ref # 92139F)	92139-1271	8
BUSHING,CONNECTING ROD,BLACK (Ref # 92139G)	92139-1272	AR
BUSHING,CONNECTING ROD,BROWN (Ref # 92139H)	92139-1273	AR
BOLT,8X22 (Ref # 92154)	92154-4492	8
BOLT,CONNECTING ROD (Ref # 92154A)	92154-4493	8
WASHER,T=2.5 (Ref # 92200)	92200-0744	2
BALL-STEEL,11/32 (Ref # 600)	600A1100	4

© 2026 Kawasaki Motors Corp., U.S.A.