2026 RIDGE® HVAC

PARTS DIAGRAM

Decals(Gray)(TTFNN/TTFNL)

F2861

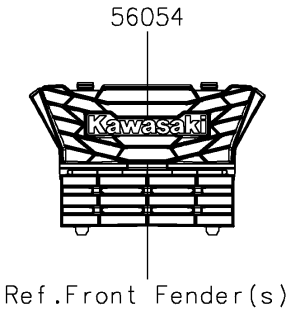

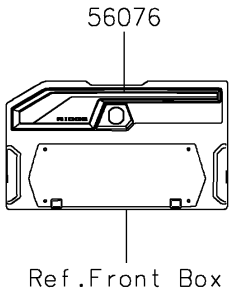

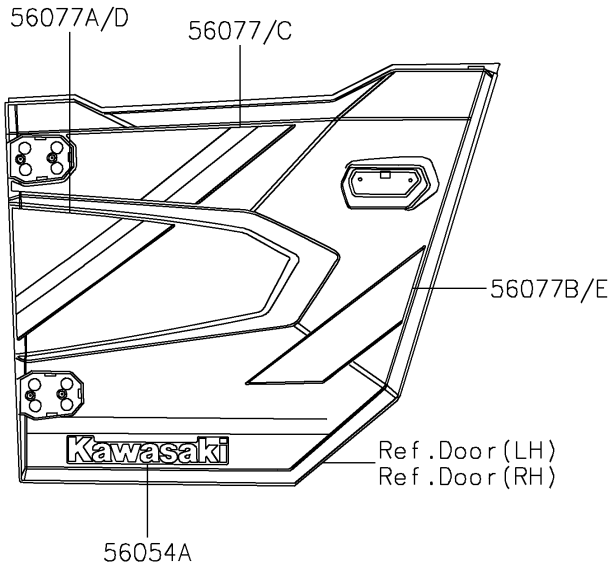

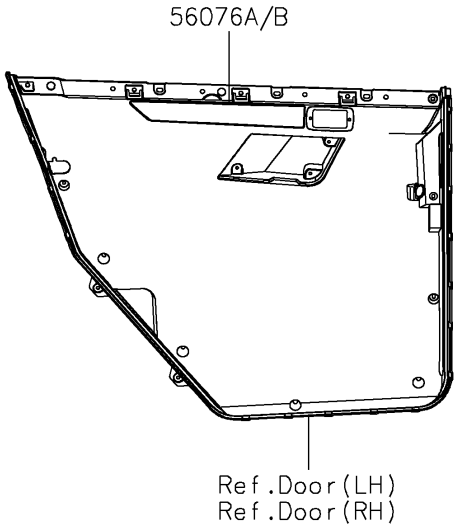

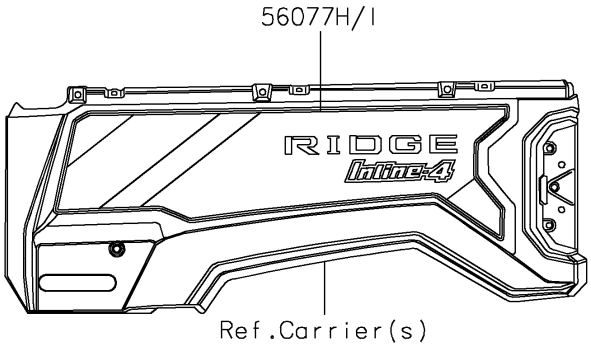

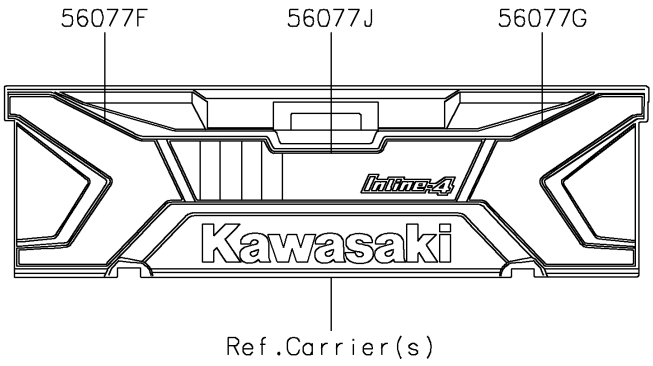

© 2026 Kawasaki Motors Corp., U.S.A.

2026 RIDGE® HVAC

PARTS LIST

Decals(Gray)(TTFNN/TTFNL)

ITEM NAME	PART NUMBER	QUANTITY
MARK,KAWASAKI (Ref # 56054)	56054-3890	1
MARK,DOOR COVER,KAWASAKI (Ref # 56054A)	56054-4314	2
PATTERN,PANEL COVER (Ref # 56076)	56076-7891	1
PATTERN,DOOR COVER,LH,INNER (Ref # 56076A)	56076-7892	1
PATTERN,DOOR COVER,RH,INNER (Ref # 56076B)	56076-7893	1
PATTERN,FR DOOR COVER,LH,UPP (Ref # 56077)	56077-2417	1
PATTERN,FR DOOR COVER,LH,LWR (Ref # 56077A)	56077-2418	1
PATTERN,FR DOOR COVER,LH,RR (Ref # 56077B)	56077-2419	1
PATTERN,FR DOOR COVER,RH,UPP (Ref # 56077C)	56077-2421	1
PATTERN,FR DOOR COVER,RH,LWR (Ref # 56077D)	56077-2422	1
PATTERN,FR DOOR COVER,RH,RR (Ref # 56077E)	56077-2423	1
PATTERN,TAIL GATE,LH (Ref # 56077F)	56077-2432	1
PATTERN,TAIL GATE,RH (Ref # 56077G)	56077-2433	1
PATTERN,RR FENDER,LH (Ref # 56077H)	56077-7131	1
PATTERN,RR FENDER,RH (Ref # 56077I)	56077-7132	1
PATTERN,TAIL GATE,CNT (Ref # 56077J)	56077-7133	1

© 2026 Kawasaki Motors Corp., U.S.A.