2026 RIDGE® HVAC

PARTS DIAGRAM

Ignition Switch

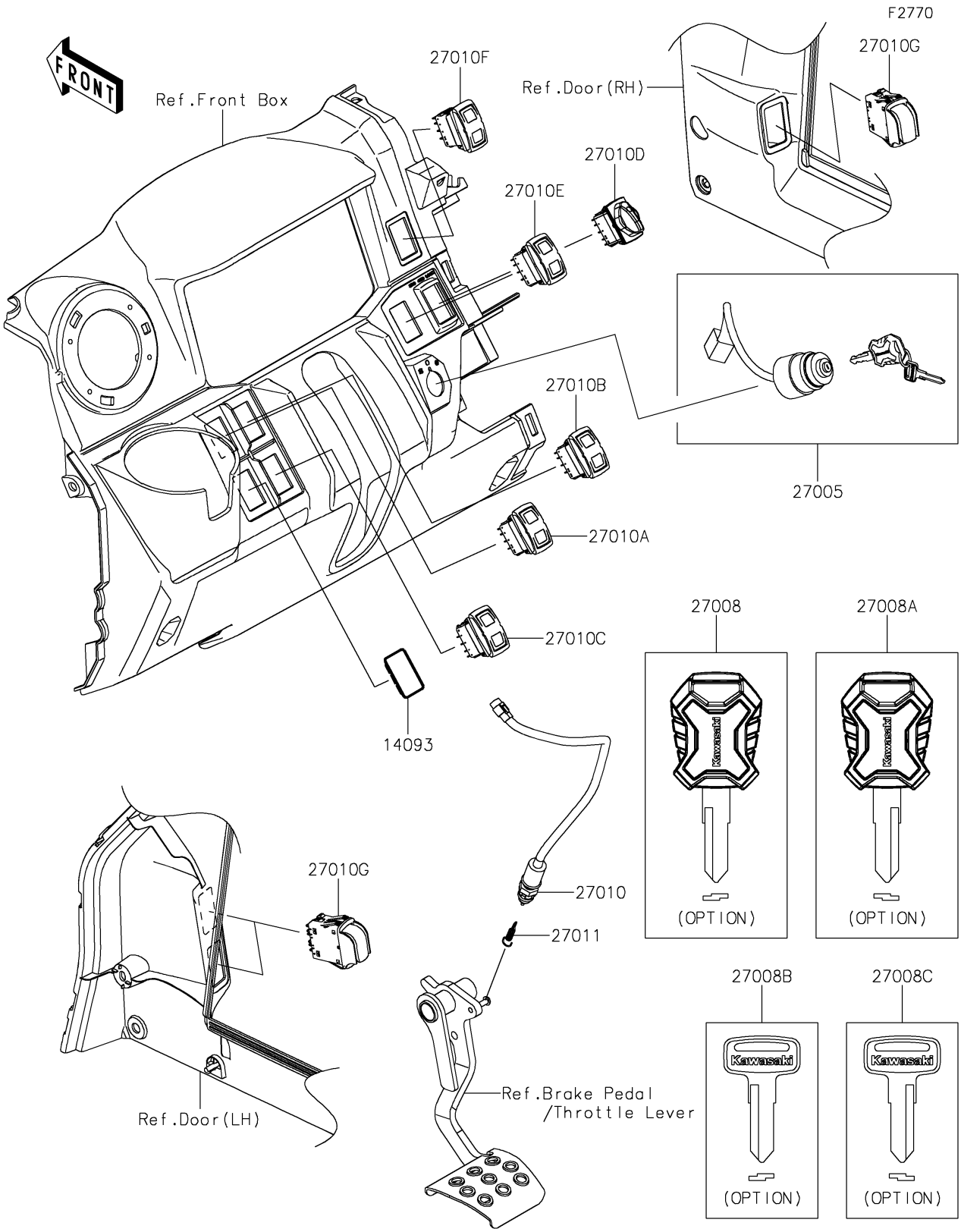

© 2026 Kawasaki Motors Corp., U.S.A.

2026 RIDGE® HVAC

PARTS LIST

Ignition Switch

ITEM NAME	PART NUMBER	QUANTITY
COVER,SWITCH (Ref # 14093)	14093-1202	1
SWITCH-ASSY-IGNITION (Ref # 27005)	27005-0733	1
KEY-LOCK,BLANK,MASCOT (Ref # 27008)	27008-0713	1
KEY-LOCK,BLANK,MASCOT (Ref # 27008A)	27008-0714	1
KEY-LOCK,BLANK (Ref # 27008B)	27008-1153	1
KEY-LOCK,BLANK (Ref # 27008C)	27008-1157	1
SWITCH,BRAKE (Ref # 27010)	27010-0724	1
SWITCH,UP/DOWN (Ref # 27010A)	27010-0954	1
SWITCH,SELECT/RETURN (Ref # 27010B)	27010-0955	1
SWITCH,HEAD LAMP (Ref # 27010C)	27010-0984	1
SWITCH,2WD/4WD (Ref # 27010D)	27010-0986	1
SWITCH,3PW MODE (Ref # 27010E)	27010-0987	1
SWITCH,WIPER&WASHER (Ref # 27010F)	27010-0989	1
SWITCH,POWER WINDOW (Ref # 27010G)	27010-1539	3
SPRING,BRAKE LAMP SWITCH (Ref # 27011)	27011-006	1

© 2026 Kawasaki Motors Corp., U.S.A.