# 2026 RIDGE® HVAC

## PARTS DIAGRAM

### Front Hubs/Brakes

F2230

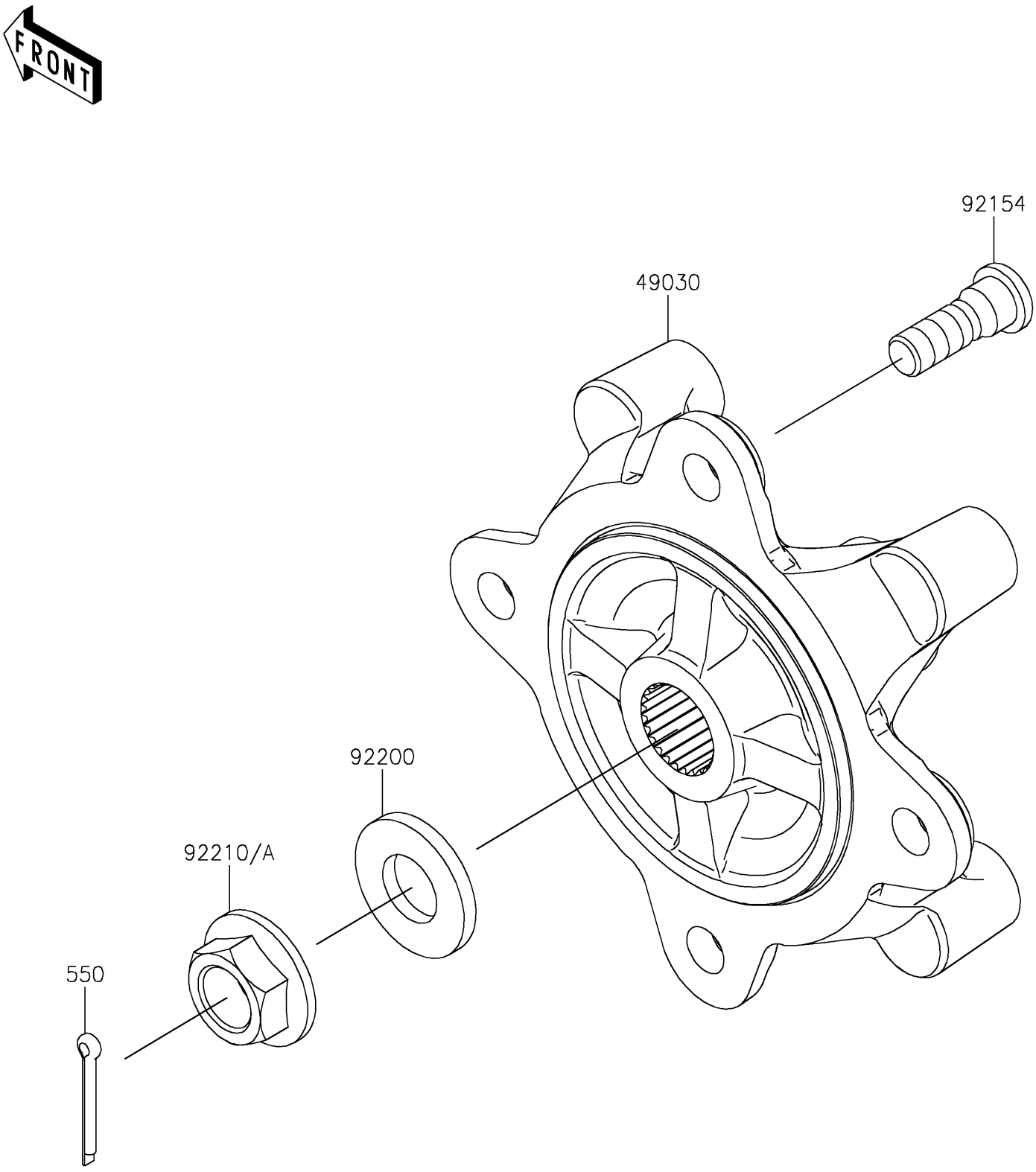


© 2026 Kawasaki Motors Corp., U.S.A.

# 2026 RIDGE® HVAC

## PARTS LIST

### Front Hubs/Brakes

| ITEM NAME | PART NUMBER | QUANTITY |
|---|---|---|
| HUB,FR (Ref # 49030) | 49030-0570 | 2 |
| BOLT,12MM (Ref # 92154) | 92154-7074 | 8 |
| WASHER,20.3X41X4.5 (Ref # 92200) | 92200-2609 | 2 |
| NUT,FLANGED,20MM (Ref # 92210) | 92210-1921 | 1 |
| NUT,FLANGED,20MM (Ref # 92210A) | 92210-2093 | 1 |
| PIN-COTTER,4.0X30 (Ref # 550) | 550AA4030 | 2 |

© 2026 Kawasaki Motors Corp., U.S.A.