2026 RIDGE® HVAC

PARTS DIAGRAM

Gear Box

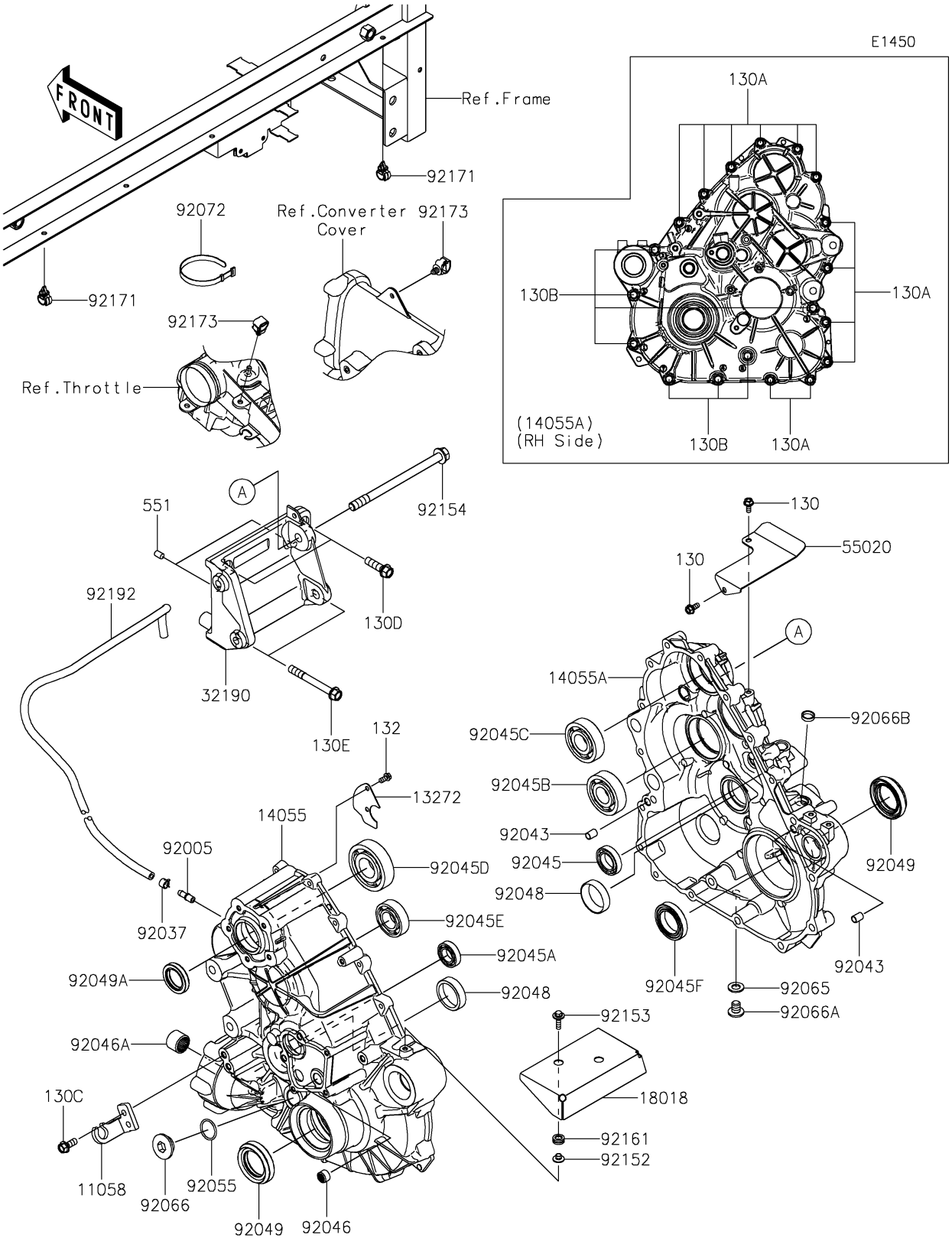

© 2026 Kawasaki Motors Corp., U.S.A.

2026 RIDGE® HVAC

PARTS LIST

Gear Box

ITEM NAME	PART NUMBER	QUANTITY
BRACKET,CABLE (Ref # 11058)	11058-0560	1
PLATE (Ref # 13272)	13272-7230	1
CASE-GEAR,LH (Ref # 14055)	14055-0691	1
CASE-GEAR,RH (Ref # 14055A)	14055-0692	1
PLATE-HEAT GUARD (Ref # 18018)	18018-0647	1
BRACKET-ENGINE (Ref # 32190)	32190-0888	1
GUARD (Ref # 55020)	55020-2426	1
FITTING,BREATHER (Ref # 92005)	92005-1127	1
CLAMP,TUBE (Ref # 92037)	92037-1505	1
PIN,DOWEL,10X14 (Ref # 92043)	92043-1037	2
BEARING-BALL,#6905 (Ref # 92045)	92045-036	1
BEARING-BALL,6904 (Ref # 92045A)	92045-0705	1
BEARING-BALL,6305RSH2 (Ref # 92045B)	92045-0899	1
BEARING-BALL,6305Z (Ref # 92045C)	92045-0901	1
BEARING-BALL,TAB306C3 (Ref # 92045D)	92045-0961	1
BEARING-BALL,6205R (Ref # 92045E)	92045-0964	1
BEARING-BALL,6907C2 (Ref # 92045F)	92045-1373	1
BEARING-NEEDLE,HK1210FM (Ref # 92046)	92046-0034	1
BEARING-NEEDLE (Ref # 92046A)	92046-0039	1
RACE (Ref # 92048)	92048-1020	2
SEAL-OIL,TC9Y 40X62X10X17.2 (Ref # 92049)	92049-0815	2
SEAL-OIL,HTC 30X45X8 (Ref # 92049A)	92049-0848	1
RING-O,25.7X2.4 (Ref # 92055)	92055-1136	1
GASKET,12X22X2 (Ref # 92065)	92065-097	1
PLUG,25X8 (Ref # 92066)	92066-0012	1
PLUG,12X15 (Ref # 92066A)	92066-0943	1
PLUG (Ref # 92066B)	92066-7014	1
BAND,L=186 (Ref # 92072)	92072-056	1
COLLAR,6.3X8.3X7.2 (Ref # 92152)	92152-1865	2

© 2026 Kawasaki Motors Corp., U.S.A.

2026 RIDGE® HVAC

PARTS LIST

Gear Box

ITEM NAME	PART NUMBER	QUANTITY
BOLT,FLANGED,6X22 (Ref # 92153)	92153-0950	2
BOLT,12X175 (Ref # 92154)	92154-3859	2
DAMPER (Ref # 92161)	92161-2510	2
CLAMP,13MM DIA. (Ref # 92171)	92171-1415	2
CLAMP,12MM DIA. (Ref # 92173)	92173-0736	2
TUBE,5.8X10.8X1430 (Ref # 92192)	92192-2660	1
BOLT-FLANGED,6X14 (Ref # 130)	130BA0614	2
BOLT-FLANGED,8X45 (Ref # 130A)	130BA0845	12
BOLT-FLANGED,10X55 (Ref # 130B)	130BA1055	7
BOLT-FLANGED,8X20 (Ref # 130C)	130CA0820	2
BOLT-FLANGED,10X35 (Ref # 130D)	130CA1035	2
BOLT-FLANGED,10X85 (Ref # 130E)	130CA1085	2
BOLT-FLANGED-SMALL,6X12 (Ref # 132)	132BA0612	1
PIN-DOWEL,8X12 (Ref # 551)	551A0812	2

© 2026 Kawasaki Motors Corp., U.S.A.