2026 RIDGE® HVAC

PARTS DIAGRAM

Cylinder Head

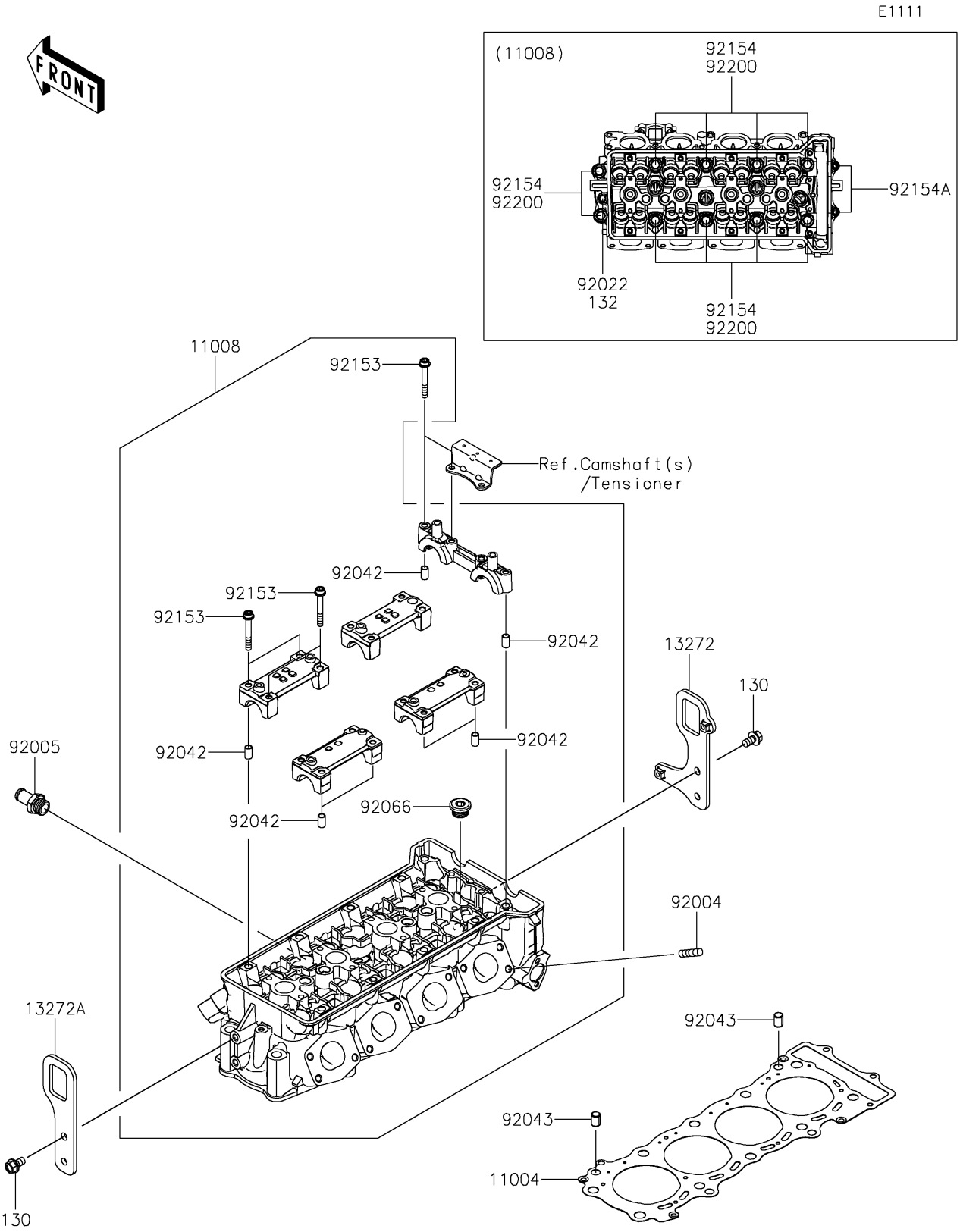

© 2026 Kawasaki Motors Corp., U.S.A.

2026 RIDGE® HVAC

PARTS LIST

Cylinder Head

ITEM NAME	PART NUMBER	QUANTITY
GASKET-HEAD (Ref # 11004)	11004-0814	1
HEAD-COMP-CYLINDER (Ref # 11008)	11008-1556	1
PLATE,ENG HANGING RH (Ref # 13272)	13272-7198	1
PLATE,ENG HANGING LH (Ref # 13272A)	13272-7199	1
STUD,8X22 (Ref # 92004)	92004-0025	10
FITTING (Ref # 92005)	92005-1446	1
WASHER,6.2X11X1 (Ref # 92022)	92022-304	1
PIN,DOWEL,6.3X8X14 (Ref # 92042)	92042-007	10
PIN,8.2X10X14 (Ref # 92043)	92043-1264	2
PLUG,18X10 (Ref # 92066)	92066-0832	4
BOLT,SOCKET,6X45 (Ref # 92153)	92153-0656	20
BOLT,11X157 (Ref # 92154)	92154-3931	10
BOLT,6X87 (Ref # 92154A)	92154-7025	2
WASHER,11.2X18.2X1.8 (Ref # 92200)	92200-0940	10
BOLT-FLANGED,8X14 (Ref # 130)	130CA0814	4
BOLT-FLANGED-SMALL,6X10 (Ref # 132)	132BA0610	1

© 2026 Kawasaki Motors Corp., U.S.A.