2026 RIDGE®

PARTS DIAGRAM

Side Covers

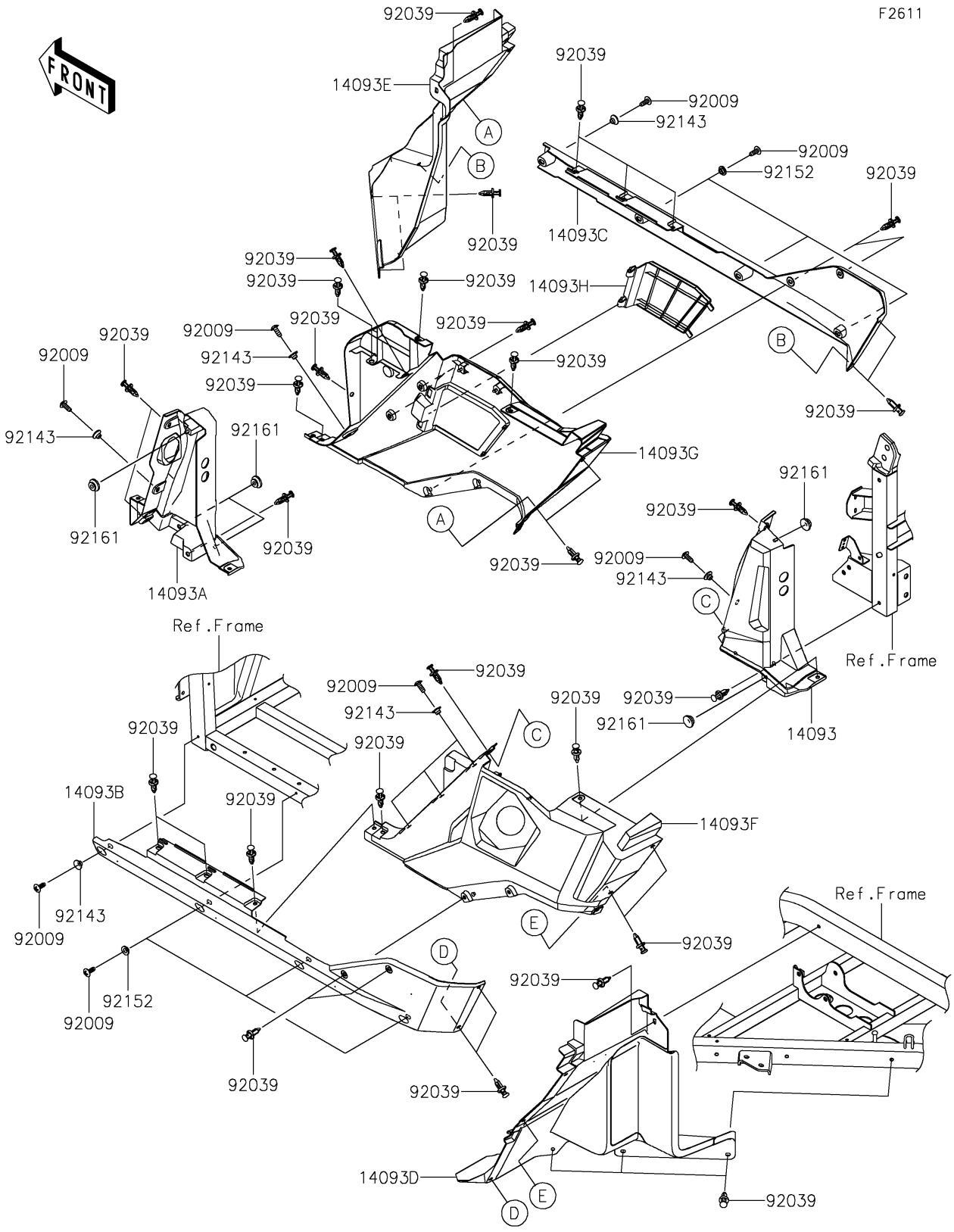

© 2026 Kawasaki Motors Corp., U.S.A.

2026 RIDGE®

PARTS LIST

Side Covers

ITEM NAME	PART NUMBER	QUANTITY
COVER,SIDE,LH,UPP (Ref # 14093)	14093-1327	1
COVER,SIDE,RH,UPP (Ref # 14093A)	14093-1328	1
COVER,SIDE GUARD,LH,LWR,BLACK (Ref # 14093B)	14093-1331-6Z	1
COVER,SIDE GUARD,RH,LWR,BLACK (Ref # 14093C)	14093-1332-6Z	1
COVER,RR MUDGUARD,LH (Ref # 14093D)	14093-1335	1
COVER,RR MUDGUARD,RH (Ref # 14093E)	14093-1336	1
COVER,SIDE,LH,LWR (Ref # 14093F)	14093-1343	1
COVER,SIDE,RH,LWR (Ref # 14093G)	14093-1344	1
COVER,BATTERY (Ref # 14093H)	14093-1345	1
SCREW,TAPPING,6X16 (Ref # 92009)	92009-1166	14
RIVET (Ref # 92039)	92039-0776	41
COLLAR (Ref # 92143)	92143-1057	8
COLLAR,6.3X9.5X4.1 (Ref # 92152)	92152-1571	6
DAMPER (Ref # 92161)	92161-1531	6

© 2026 Kawasaki Motors Corp., U.S.A.