2026 RIDGE®

PARTS DIAGRAM

Cables

F2540

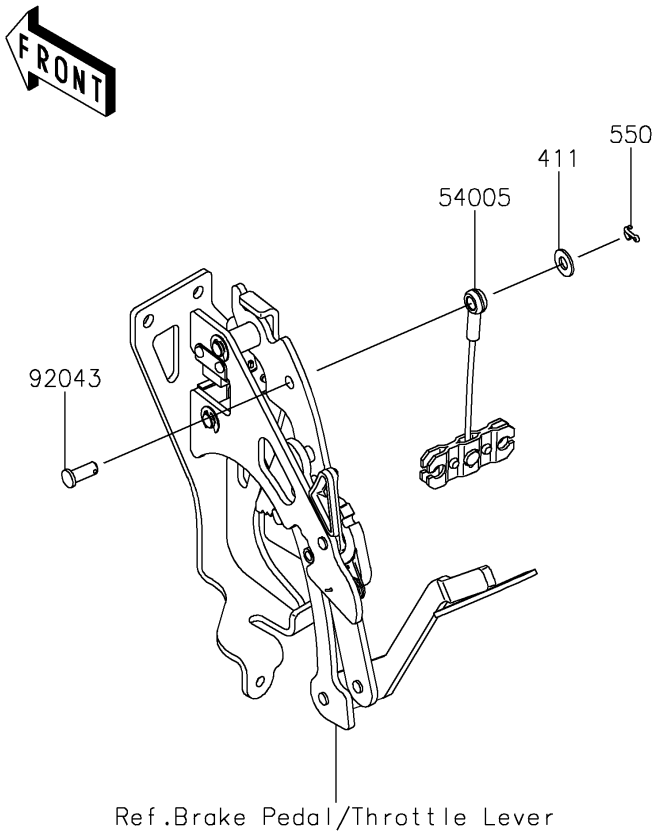

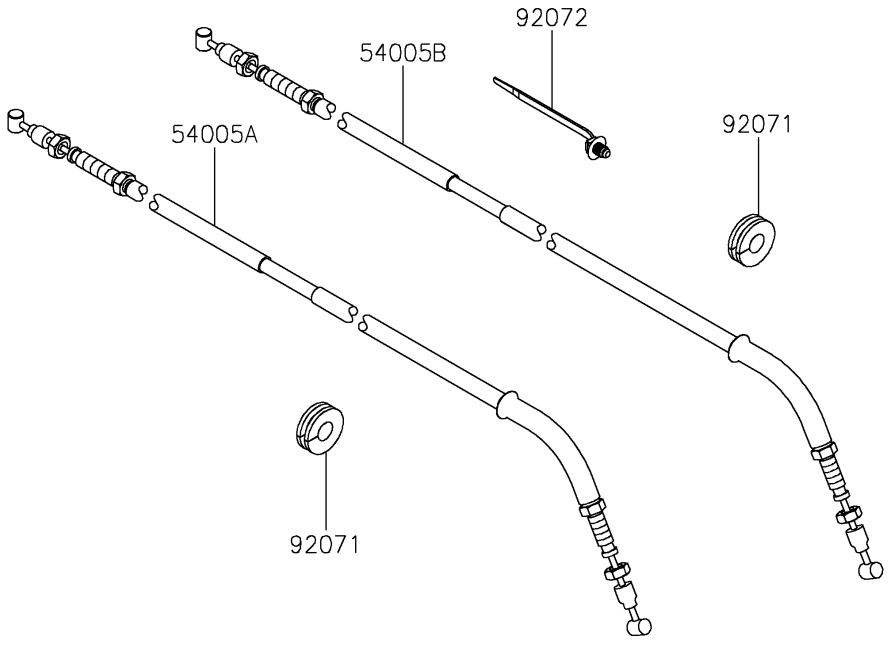

© 2026 Kawasaki Motors Corp., U.S.A.

2026 RIDGE®

PARTS LIST

Cables

ITEM NAME	PART NUMBER	QUANTITY
CABLE-BRAKE,PARKING,FR (Ref # 54005)	54005-0035	1
CABLE-BRAKE,PARKING,LH (Ref # 54005A)	54005-0318	1
CABLE-BRAKE,PARKING,RH (Ref # 54005B)	54005-0319	1
PIN (Ref # 92043)	92043-1039	1
GROMMET (Ref # 92071)	92071-0029	5
BAND,OS170-FT7(BLACK) (Ref # 92072)	92072-1414	3
WASHER-PLAIN,8MM (Ref # 411)	411AA0800	1
PIN-COTTER,2.5X18 (Ref # 550)	550AA2518	1

© 2026 Kawasaki Motors Corp., U.S.A.