2026 RIDGE®

PARTS DIAGRAM

Generator

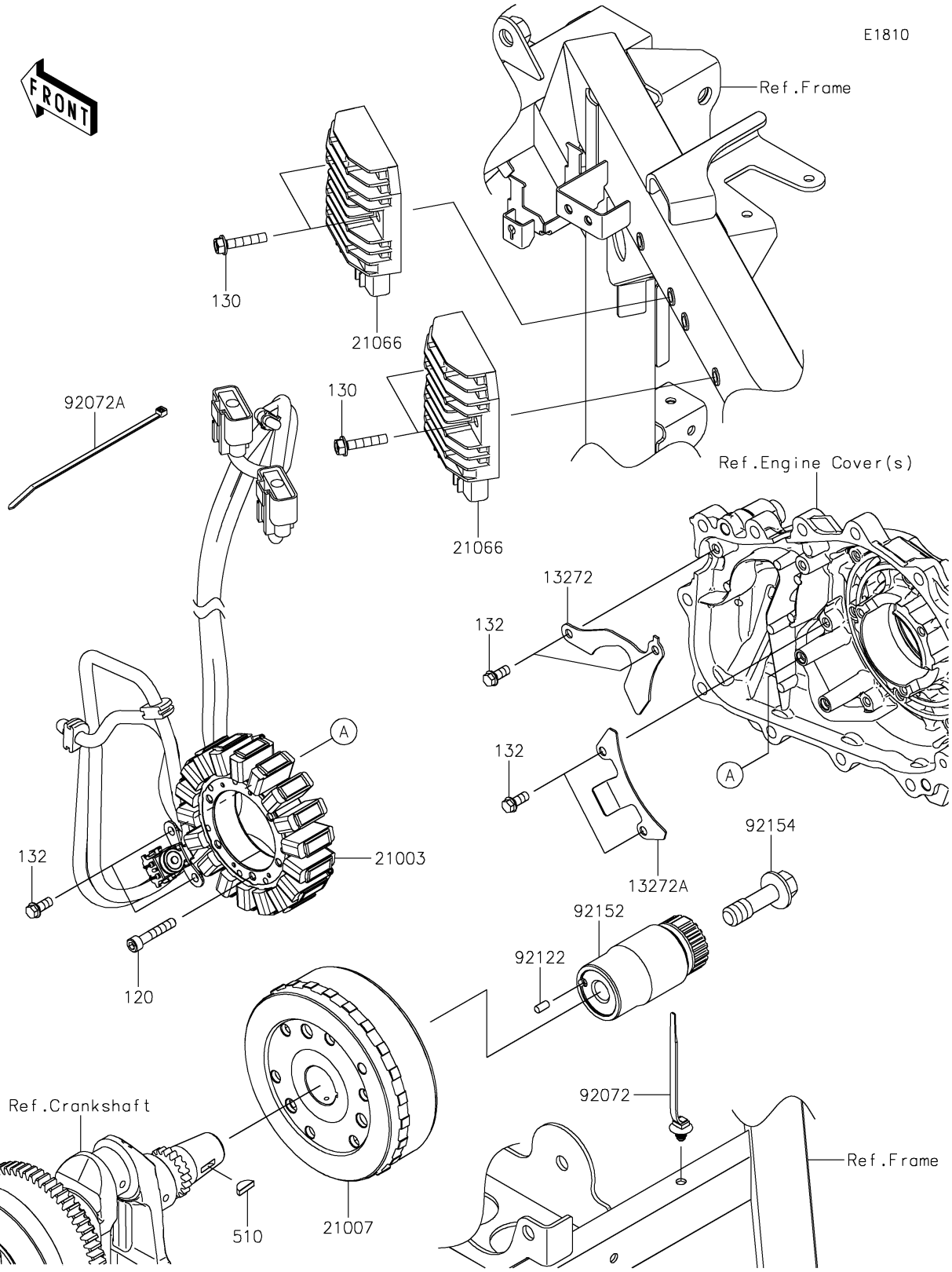

© 2026 Kawasaki Motors Corp., U.S.A.

2026 RIDGE®

PARTS LIST

Generator

ITEM NAME	PART NUMBER	QUANTITY
PLATE,LEAD WIRE (Ref # 13272)	13272-4122	1
PLATE,LEAD WIRE (Ref # 13272A)	13272-4123	1
STATOR (Ref # 21003)	21003-0223	1
ROTOR (Ref # 21007)	21007-0731	1
REGULATOR-VOLTAGE (Ref # 21066)	21066-0771	2
BAND,OS170-FT7(BLACK) (Ref # 92072)	92072-1414	1
BAND,L=292.1 (Ref # 92072A)	92072-3509	1
ROLLER (Ref # 92122)	92122-0569	1
COLLAR (Ref # 92152)	92152-2932	1
BOLT,14X45 (Ref # 92154)	92154-7019	1
BOLT-SOCKET,6X35 (Ref # 120)	120CA0635	3
BOLT-FLANGED,6X30 (Ref # 130)	130BA0630	4
BOLT-FLANGED-SMALL,6X14 (Ref # 132)	132BA0614	6
KEY-WOODRUFF (Ref # 510)	510A4200	1

© 2026 Kawasaki Motors Corp., U.S.A.