2026 RIDGE® CREW PLATINUM RANCH EDITION HVAC

Kawasaki
Let the Good Times Roll®

PARTS DIAGRAM

Fuel Tank(CA)

F2410A

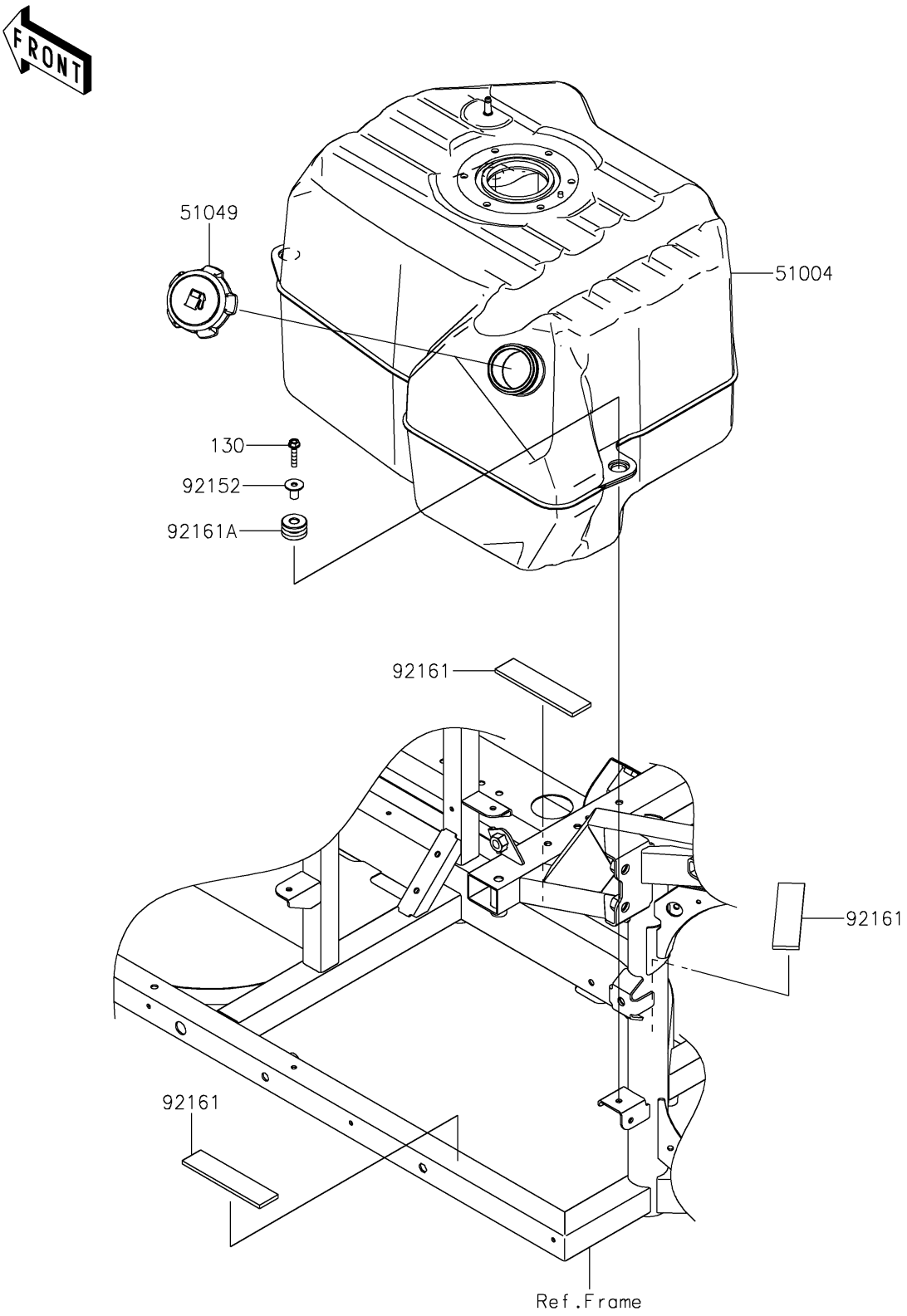

© 2026 Kawasaki Motors Corp., U.S.A.

2026 RIDGE® CREW PLATINUM RANCH EDITION HVAC

Kawasaki
Let the Good Times Roll®

PARTS LIST
Fuel Tank(CA)

ITEM NAME	PART NUMBER	QUANTITY
TANK-FUEL (Ref # 51004)	51004-0727	1
CAP-TANK,FUEL (Ref # 51049)	51049-0718	1
COLLAR,6.8X10X18.1 (Ref # 92152)	92152-1867	3
DAMPER,31.1X130X5 (Ref # 92161)	92161-0936	3
DAMPER,TANK (Ref # 92161A)	92161-2178	3
BOLT-FLANGED,6X30 (Ref # 130)	130BA0630	3

© 2026 Kawasaki Motors Corp., U.S.A.