2026 RIDGE® CREW PLATINUM RANCH EDITION HVAC

Kawasaki
Let the Good Times Roll®

PARTS DIAGRAM

Fuel Tank(CN,US)

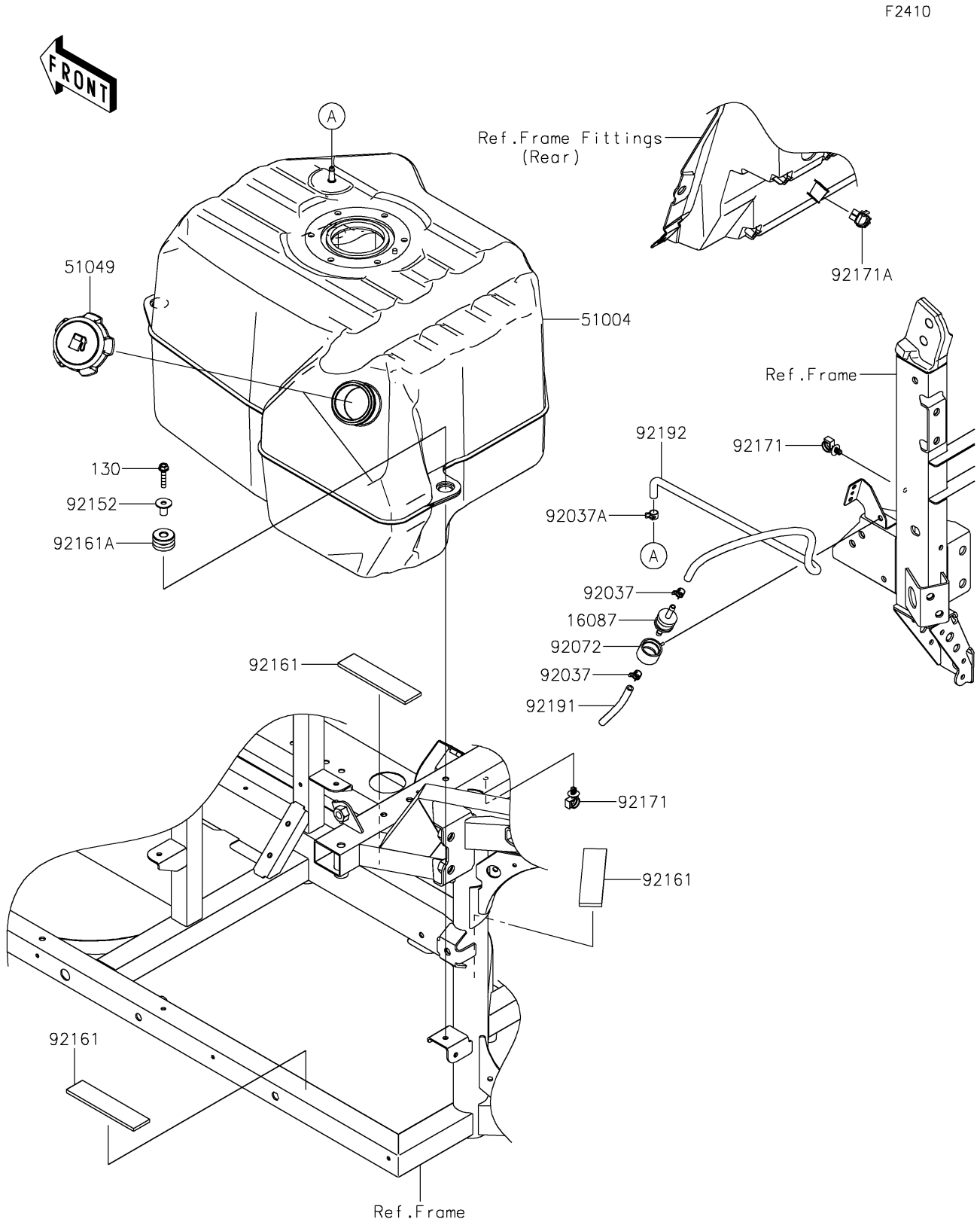

© 2026 Kawasaki Motors Corp., U.S.A.

2026 RIDGE® CREW PLATINUM RANCH EDITION HVAC

Kawasaki
Let the Good Times Roll®

PARTS LIST
Fuel Tank(CN,US)

ITEM NAME	PART NUMBER	QUANTITY
VALVE-CHECK (Ref # 16087)	16087-0008	1
TANK-FUEL (Ref # 51004)	51004-0727	1
CAP-TANK,FUEL (Ref # 51049)	51049-0718	1
CLAMP,TUBE (Ref # 92037)	92037-1461	2
CLAMP (Ref # 92037A)	92037-2113	1
BAND (Ref # 92072)	92072-0850	1
COLLAR,6.8X10X18.1 (Ref # 92152)	92152-1867	3
DAMPER,31.1X130X5 (Ref # 92161)	92161-0936	3
DAMPER,TANK (Ref # 92161A)	92161-2178	3
CLAMP (Ref # 92171)	92171-0453	2
CLAMP,EDGE CLIP (Ref # 92171A)	92171-1722	1
TUBE,5X9X100 (Ref # 92191)	92191-1792	1
TUBE,BREATHER (Ref # 92192)	92192-2626	1
BOLT-FLANGED,6X30 (Ref # 130)	130BA0630	3

© 2026 Kawasaki Motors Corp., U.S.A.