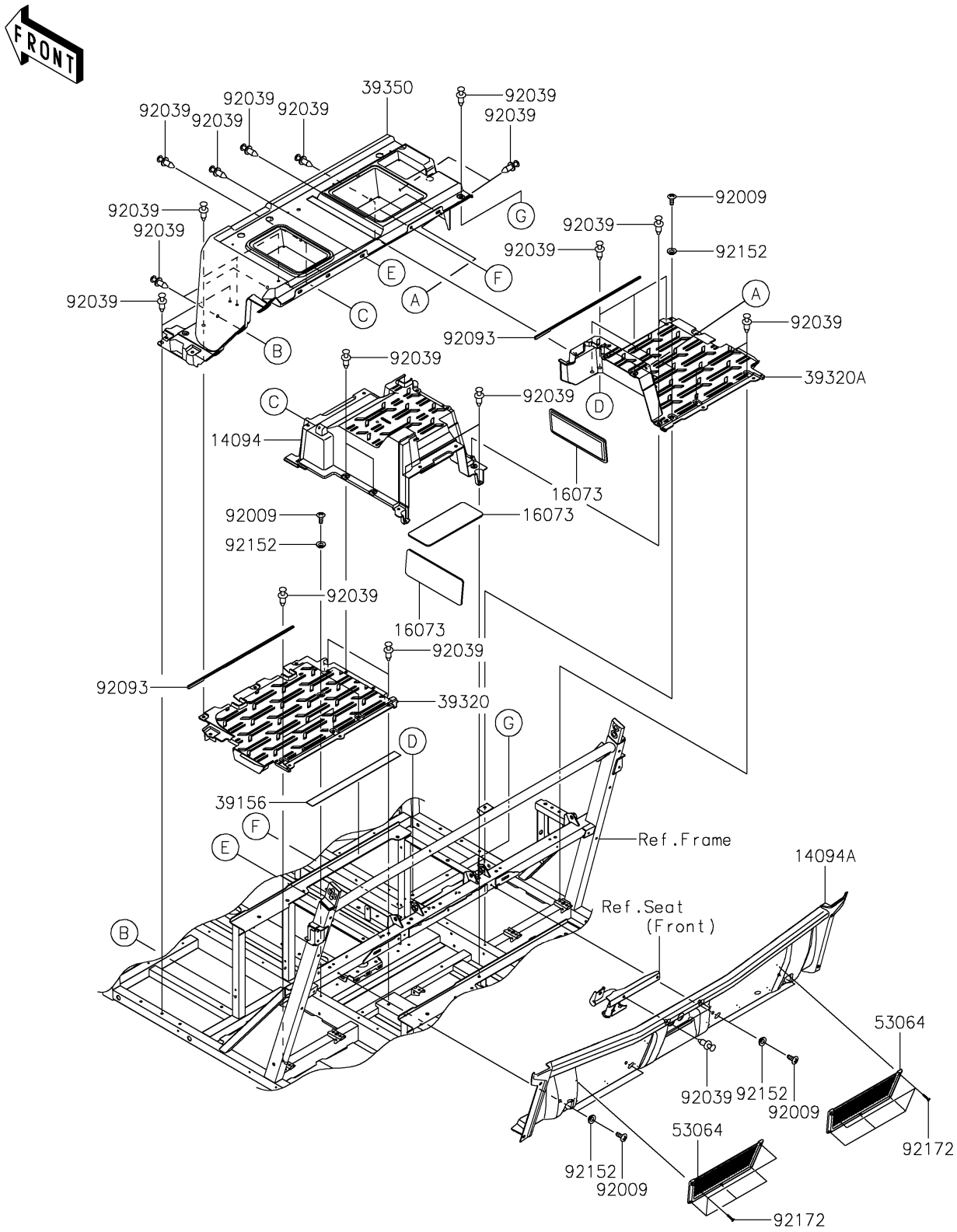
2026 RIDGE® CREW PLATINUM RANCH EDITION HVAC

Kawasaki
Let the Good Times Roll®

PARTS DIAGRAM

Frame Fittings(Middle)

F2130


FRONT
39350
92039
92039
92039
92039
92039
92039
92039
92039
92039
92039
92039
92009
92152
92039
92039
92039
92039
92039
92039
92039
92039
92039
92009
92152
92039
92039
92039
92039
92039
92039
92039
92039
92039
92039
92039

2026 RIDGE® CREW PLATINUM RANCH EDITION HVAC

Kawasaki
Let the Good Times Roll®

PARTS LIST

Frame Fittings(Middle)

ITEM NAME	PART NUMBER	QUANTITY
COVER,MID CENTER TUNNEL (Ref # 14094)	14094-0165	1
COVER,FR SEAT BACK (Ref # 14094A)	14094-0233	1
INSULATOR,FR TUNNEL&BACK PANEL (Ref # 16073)	16073-0947	3
PAD,420X30X1 (Ref # 39156)	39156-2930	1
FLOOR,MID,LH (Ref # 39320)	39320-0010	1
FLOOR,MID,RH (Ref # 39320A)	39320-0011	1
PANEL,UNDER SEAT (Ref # 39350)	39350-0044	1
NET-CARGO (Ref # 53064)	53064-0022	2
SCREW,TAPPING,6X16 (Ref # 92009)	92009-1166	8
RIVET (Ref # 92039)	92039-0776	37
SEAL,3X5X500 (Ref # 92093)	92093-0819	2
COLLAR,6.3X9.5X4.1 (Ref # 92152)	92152-1571	8
SCREW,3X14 (Ref # 92172)	92172-1544	10

© 2026 Kawasaki Motors Corp., U.S.A.