2026 RIDGE® CREW PLATINUM RANCH EDITION HVAC

Kawasaki
Let the Good Times Roll®

PARTS DIAGRAM
Ignition System

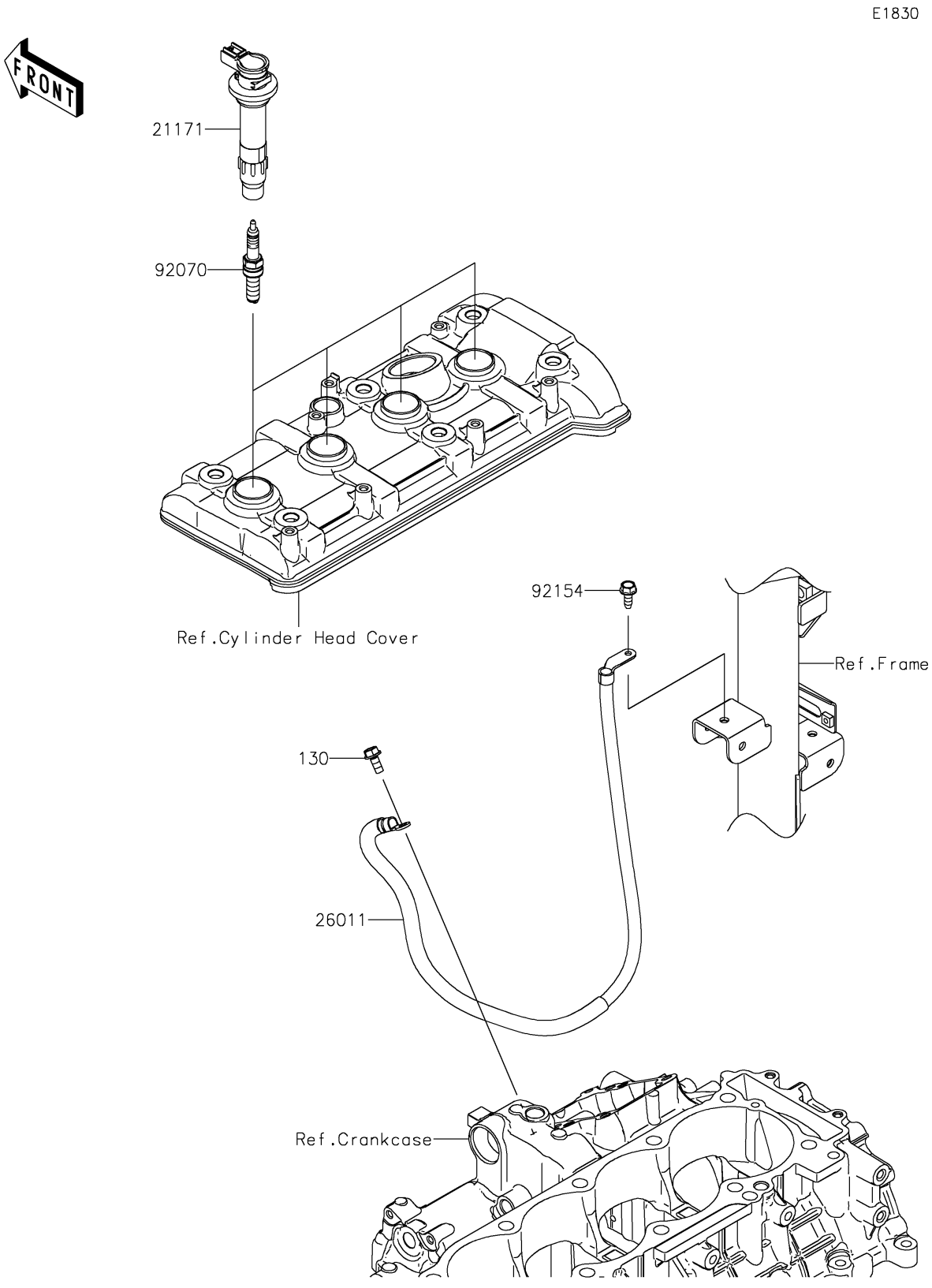

© 2026 Kawasaki Motors Corp., U.S.A.

2026 RIDGE® CREW PLATINUM RANCH EDITION HVAC

Kawasaki
Let the Good Times Roll®

PARTS LIST
Ignition System

ITEM NAME	PART NUMBER	QUANTITY
COIL-ASSY-IGNITION (Ref # 21171)	21171-0751	4
WIRE-LEAD,CRANKCASE-FRAME (Ref # 26011)	26011-2421	1
PLUG-SPARK,LMAR9G(NGK) (Ref # 92070)	92070-0716	4
BOLT,FLANGED,6X16 (Ref # 92154)	92154-0551	1
BOLT-FLANGED,6X14 (Ref # 130)	130BA0614	1

© 2026 Kawasaki Motors Corp., U.S.A.