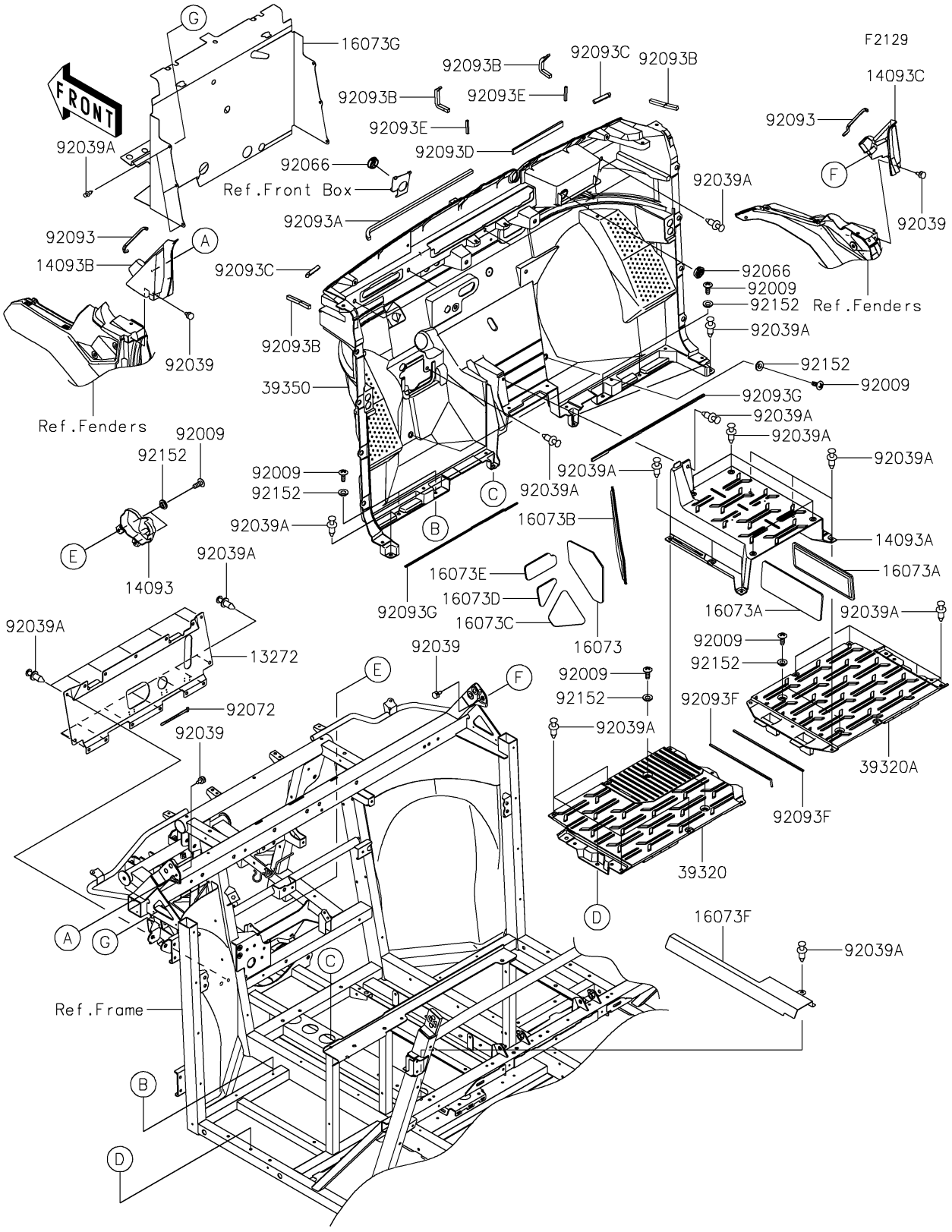
2026 RIDGE CREW HVAC Camo

PARTS DIAGRAM

Frame Fittings(Front)


FRONT
16073G
92039A
92093B
92093C
92093B
92093B
92093E
92093E
92093D
92066
Ref.Front Box
92093A
92093
14093B
92093C
92039
Ref.Fenders
92093B
39350
92009
92152
E
14093
92039A
92039A
13272
92072
92039
92039
E
F
92039A
92039A
92039A

2026 RIDGE CREW HVAC Camo

PARTS LIST

Frame Fittings(Front)

ITEM NAME	PART NUMBER	QUANTITY
PLATE,FR TUNNEL (Ref # 13272)	13272-4215	1
COVER,FR GEAR,SIDE (Ref # 14093)	14093-0839	1
COVER,TUNNEL,CNT (Ref # 14093A)	14093-1330	1
COVER,A PILLAR,LH (Ref # 14093B)	14093-1369	1
COVER,A PILLAR,RH (Ref # 14093C)	14093-1370	1
INSULATOR,FR PANEL (Ref # 16073)	16073-0946	1
INSULATOR,FR TUNNEL&BACK PANEL (Ref # 16073A)	16073-0947	2
INSULATOR,FR PANEL,RH (Ref # 16073B)	16073-0963	1
INSULATOR,FR PANEL,LH,LWR (Ref # 16073C)	16073-0964	1
INSULATOR,FR PANEL,LH,CNT (Ref # 16073D)	16073-0965	1
INSULATOR,FR PANEL,LH,UPP (Ref # 16073E)	16073-0966	1
INSULATOR (Ref # 16073F)	16073-0983	1
INSULATOR,RADIATOR BACK (Ref # 16073G)	16073-1167	1
FLOOR,PANEL,LH (Ref # 39320)	39320-0001	1
FLOOR,PANEL,RH (Ref # 39320A)	39320-0002	1
PANEL,FR (Ref # 39350)	39350-0006	1
SCREW,TAPPING,6X16 (Ref # 92009)	92009-1166	12
RIVET (Ref # 92039)	92039-0046	4
RIVET (Ref # 92039A)	92039-0776	52
PLUG,FR PANEL (Ref # 92066)	92066-1598	2
BAND,L=123 (Ref # 92072)	92072-030	3
SEAL,6X6X195 (Ref # 92093)	92093-0781	2
SEAL,10X10X500 (Ref # 92093A)	92093-0784	1
SEAL,10X10X110 (Ref # 92093B)	92093-0785	4
SEAL,10X10X60 (Ref # 92093C)	92093-0786	2
SEAL,6X17X220 (Ref # 92093D)	92093-0813	1
SEAL,6X6X50 (Ref # 92093E)	92093-0817	2
SEAL,3X5X310 (Ref # 92093F)	92093-0818	2
SEAL,3X5X500 (Ref # 92093G)	92093-0819	2

© 2026 Kawasaki Motors Corp., U.S.A.

2026 RIDGE CREW HVAC Camo

PARTS LIST

Frame Fittings(Front)

ITEM NAME	PART NUMBER	QUANTITY
COLLAR,6.3X9.5X4.1 (Ref # 92152)	92152-1571	12

© 2026 Kawasaki Motors Corp., U.S.A.