# 2026 KFX®50

## PARTS DIAGRAM

### Battery

F2761

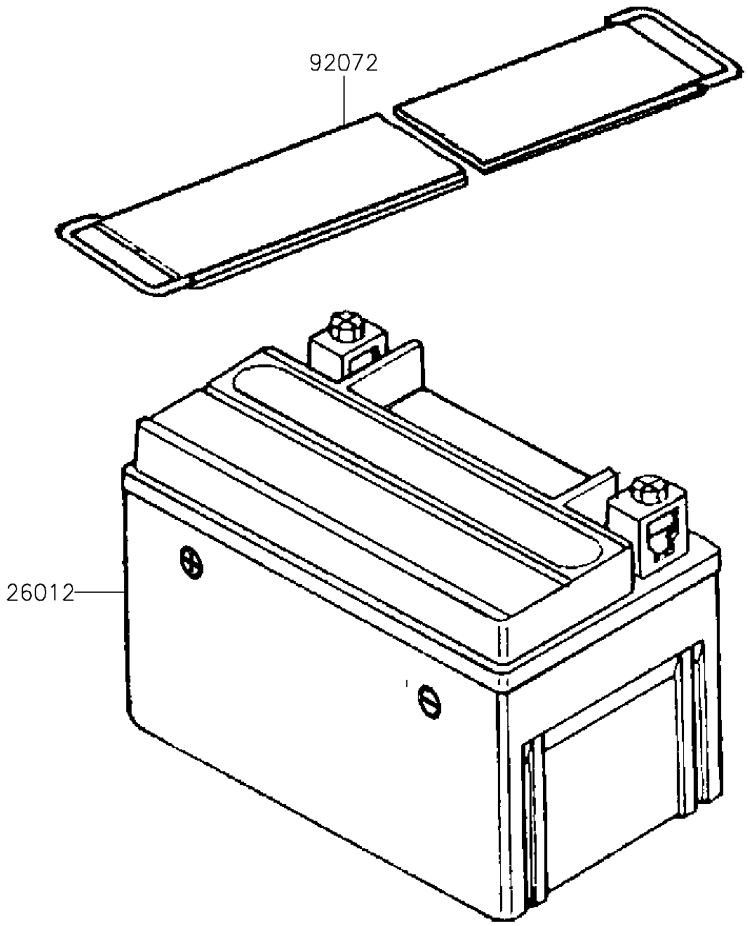





© 2026 Kawasaki Motors Corp., U.S.A.

# 2026 KFX®50

## PARTS LIST

Battery

| ITEM NAME | PART NUMBER | QUANTITY |
|---|---|---|

© 2026 Kawasaki Motors Corp., U.S.A.