2026 Z650 S ABS

PARTS DIAGRAM

Cowling

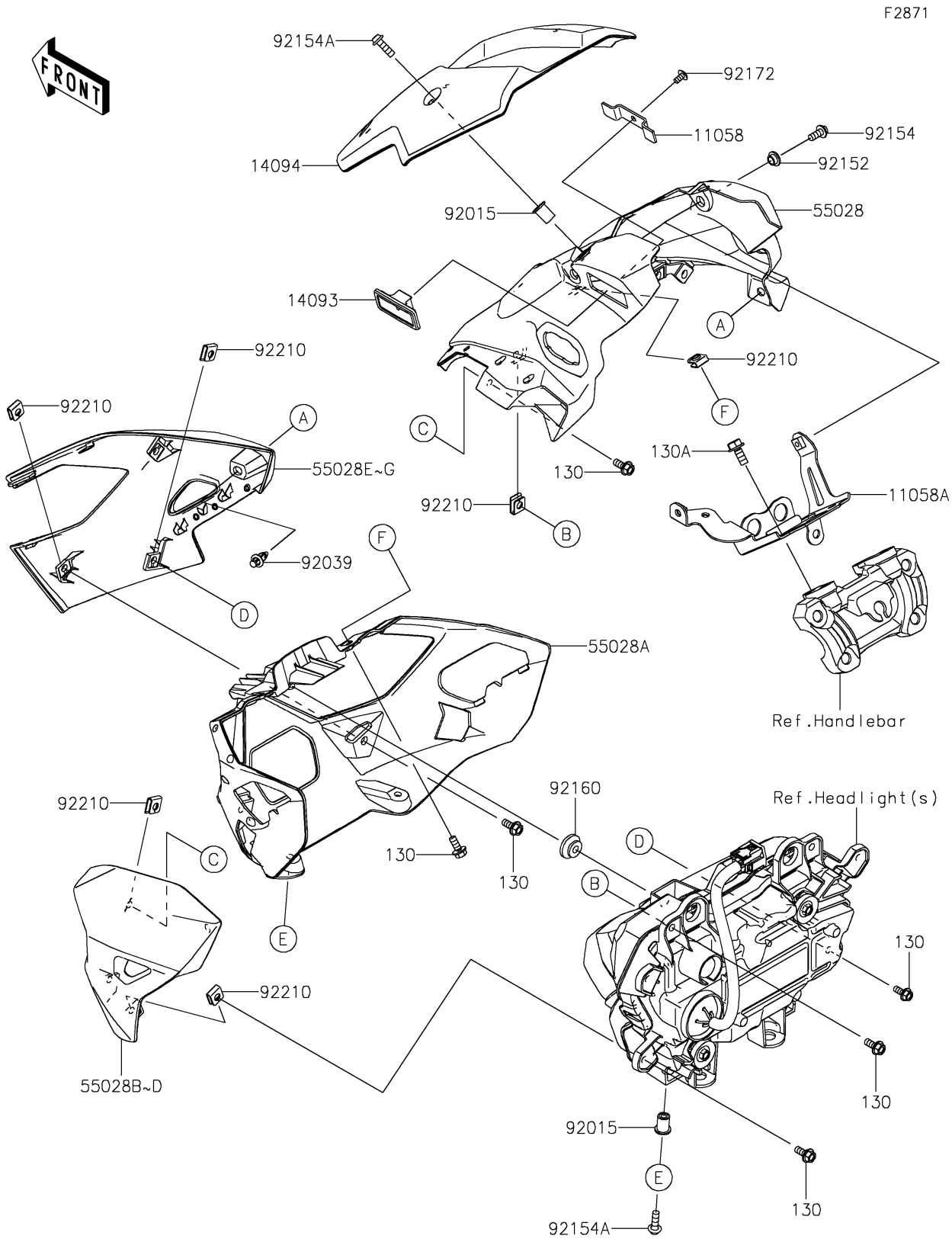

© 2026 Kawasaki Motors Corp., U.S.A.

2026 Z650 S ABS

PARTS LIST

Cowling

ITEM NAME	PART NUMBER	QUANTITY
BRACKET,INNER COVER (Ref # 11058)	11058-1246	1
BRACKET,UPPER COVER (Ref # 11058A)	11058-4126	1
COVER,INNER (Ref # 14093)	14093-1550	1
COVER,METER (Ref # 14094)	14094-0442	1
COWLING,UPP,UPP (Ref # 55028)	55028-0927	1
COWLING,UPP,LWR (Ref # 55028A)	55028-0928	1
COWLING,UPP,LH,M.C.GRAY (Ref # 55028B)	55028-0929-51A	1
COWLING,UPP,LH,C.L.GREEN (Ref # 55028C)	55028-0929-51P	1
COWLING,UPP,LH,M.F.S.BLACK (Ref # 55028D)	55028-0929-739	1
COWLING,UPP,RH,M.C.GRAY (Ref # 55028E)	55028-0930-51A	1
COWLING,UPP,RH,C.L.GREEN (Ref # 55028F)	55028-0930-51P	1
COWLING,UPP,RH,M.F.S.BLACK (Ref # 55028G)	55028-0930-739	1
NUT,WELL,5MM (Ref # 92015)	92015-1757	6
RIVET (Ref # 92039)	92039-0709	2
COLLAR,6X8X4.5 (Ref # 92152)	92152-2395	2
BOLT,SOCKET,5X12 (Ref # 92154)	92154-0917	2
BOLT,SOCKET,5X16 (Ref # 92154A)	92154-1701	6
DAMPER (Ref # 92160)	92160-1613	1
SCREW,CROSS,4X8 (Ref # 92172)	92172-1227	1
NUT (Ref # 92210)	92210-0571	10
BOLT-FLANGED,5X12 (Ref # 130)	130BA0512	10
BOLT-FLANGED,6X14 (Ref # 130A)	130BB0614	2

© 2026 Kawasaki Motors Corp., U.S.A.