2025 KFX®90

PARTS DIAGRAM

Rear Fender(s)

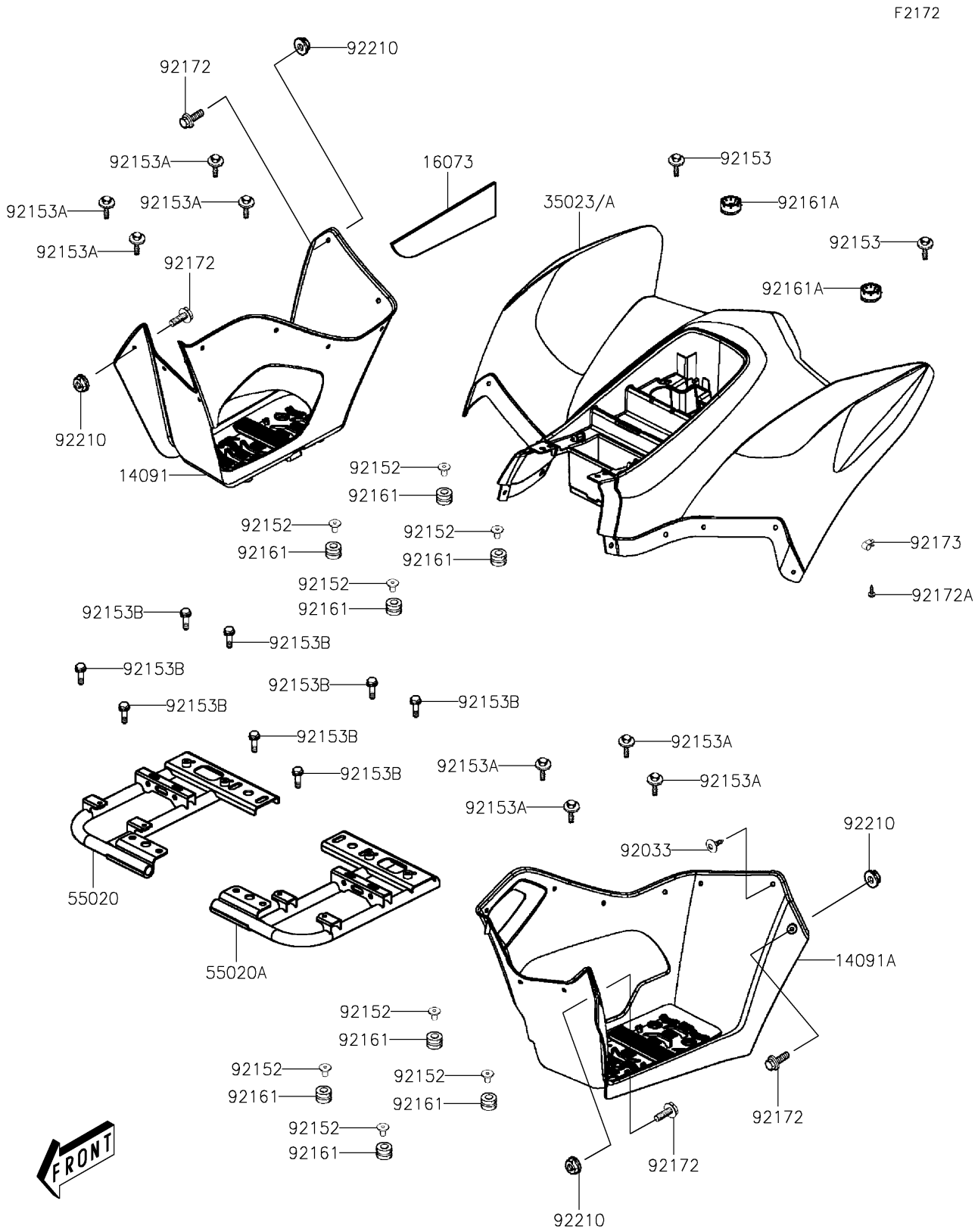

© 2026 Kawasaki Motors Corp., U.S.A.

2025 KFX®90

PARTS LIST

Rear Fender(s)

ITEM NAME	PART NUMBER	QUANTITY
COVER,SIDE,RH,S.BLACK (Ref # 14091)	14091-Y017-933	1
COVER,SIDE,LH,S.BLACK (Ref # 14091A)	14091-Y018-933	1
INSULATOR (Ref # 16073)	16073-Y003	1
FENDER-REAR,L.GREEN (Ref # 35023)	35023-Y005-930	1
FENDER-REAR,GRAY (Ref # 35023A)	35023-Y005-985	1
GUARD,SIDE,RH (Ref # 55020)	55020-Y002	1
GUARD,SIDE,LH (Ref # 55020A)	55020-Y003	1
RIVET (Ref # 92033)	92033-Y010	16
COLLAR (Ref # 92152)	92152-Y014	8
BOLT,6X16 (Ref # 92153)	92153-Y018	5
BOLT,6X20 (Ref # 92153A)	92153-Y019	8
BOLT,FLANGE,8X16 (Ref # 92153B)	92153-Y032	8
DAMPER (Ref # 92161)	92161-Y003	8
DAMPER (Ref # 92161A)	92161-Y005	2
SCREW,6X16 (Ref # 92172)	92172-Y004	4
SCREW,4X12 (Ref # 92172A)	92172-Y019	1
CLAMP (Ref # 92173)	92173-Y088	1
NUT (Ref # 92210)	92210-Y031	4

© 2026 Kawasaki Motors Corp., U.S.A.