2025 KFX®90

PARTS DIAGRAM

Kickstarter Mechanism

E1340

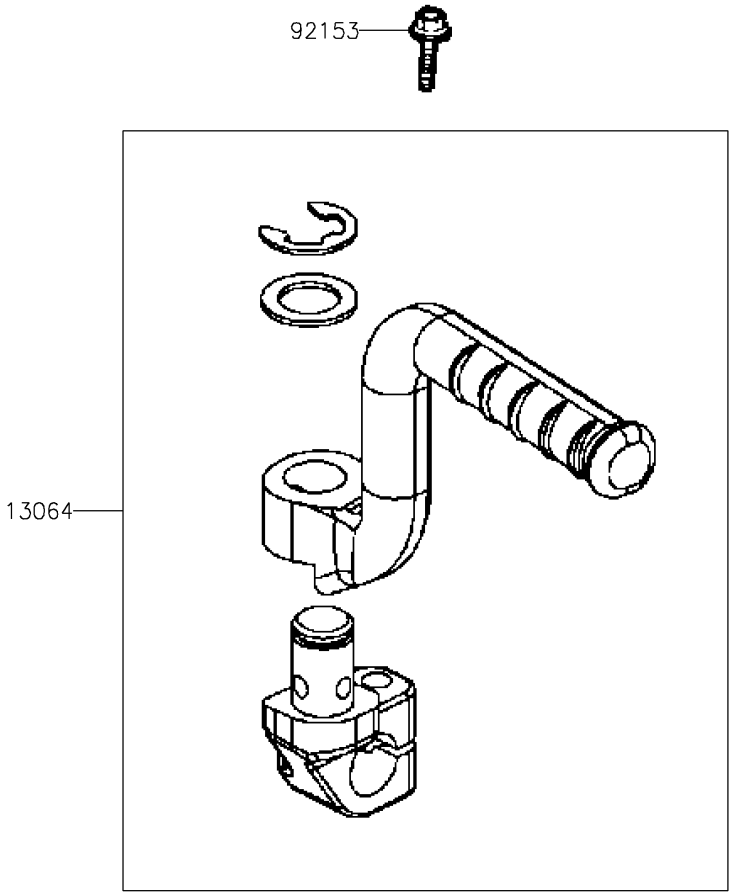

FRONT

© 2026 Kawasaki Motors Corp., U.S.A.

2025 KFX®90

PARTS LIST

Kickstarter Mechanism

ITEM NAME	PART NUMBER	QUANTITY
LEVER-ASSY-KICK,PEDAL (Ref # 13064)	13064-Y002	1
BOLT,FLANGE,6X22 (Ref # 92153)	92153-Y026	1

© 2026 Kawasaki Motors Corp., U.S.A.