2023 KFX®90

PARTS DIAGRAM

Taillight(s)

Kawasaki
Let the Good Times Roll®

F2720

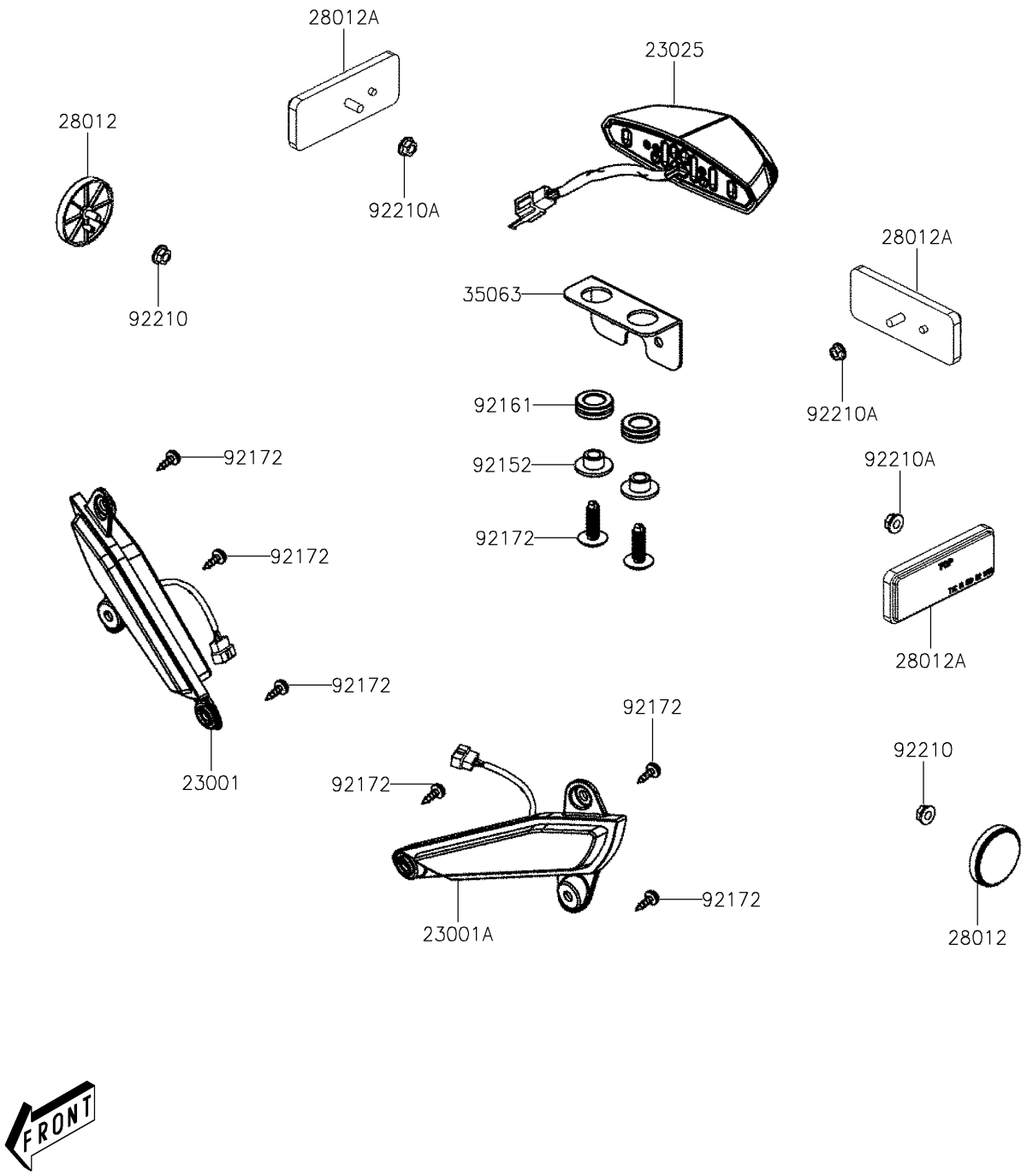

© 2026 Kawasaki Motors Corp., U.S.A.

2023 KFX®90

PARTS LIST

Taillight(s)

Kawasaki
Let the Good Times Roll®

ITEM NAME	PART NUMBER	QUANTITY
LAMP-ASSY-HEAD,LED,RH (Ref # 23001)	23001-Y002	1
LAMP-ASSY-HEAD,LED,LH (Ref # 23001A)	23001-Y003	1
LAMP-TAIL,LED (Ref # 23025)	23025-Y011	1
REFLECTOR-REFLEX (Ref # 28012)	28012-Y002	2
REFLECTOR-REFLEX (Ref # 28012A)	28012-Y003	3
STAY,TAIL LIGHT (Ref # 35063)	35063-Y047	1
COLLAR (Ref # 92152)	92152-Y077	2
DAMPER (Ref # 92161)	92161-Y058	2
SCREW,TAPPING,5X16 (Ref # 92172)	92172-Y020	8
NUT,6MM (Ref # 92210)	92210-Y026	2
NUT,FLANGE,5MM (Ref # 92210A)	92210-Y053	3

© 2026 Kawasaki Motors Corp., U.S.A.