2023 KFX®90

PARTS DIAGRAM

Crankshaft/Piston(s)

Kawasaki
Let the Good Times Roll®

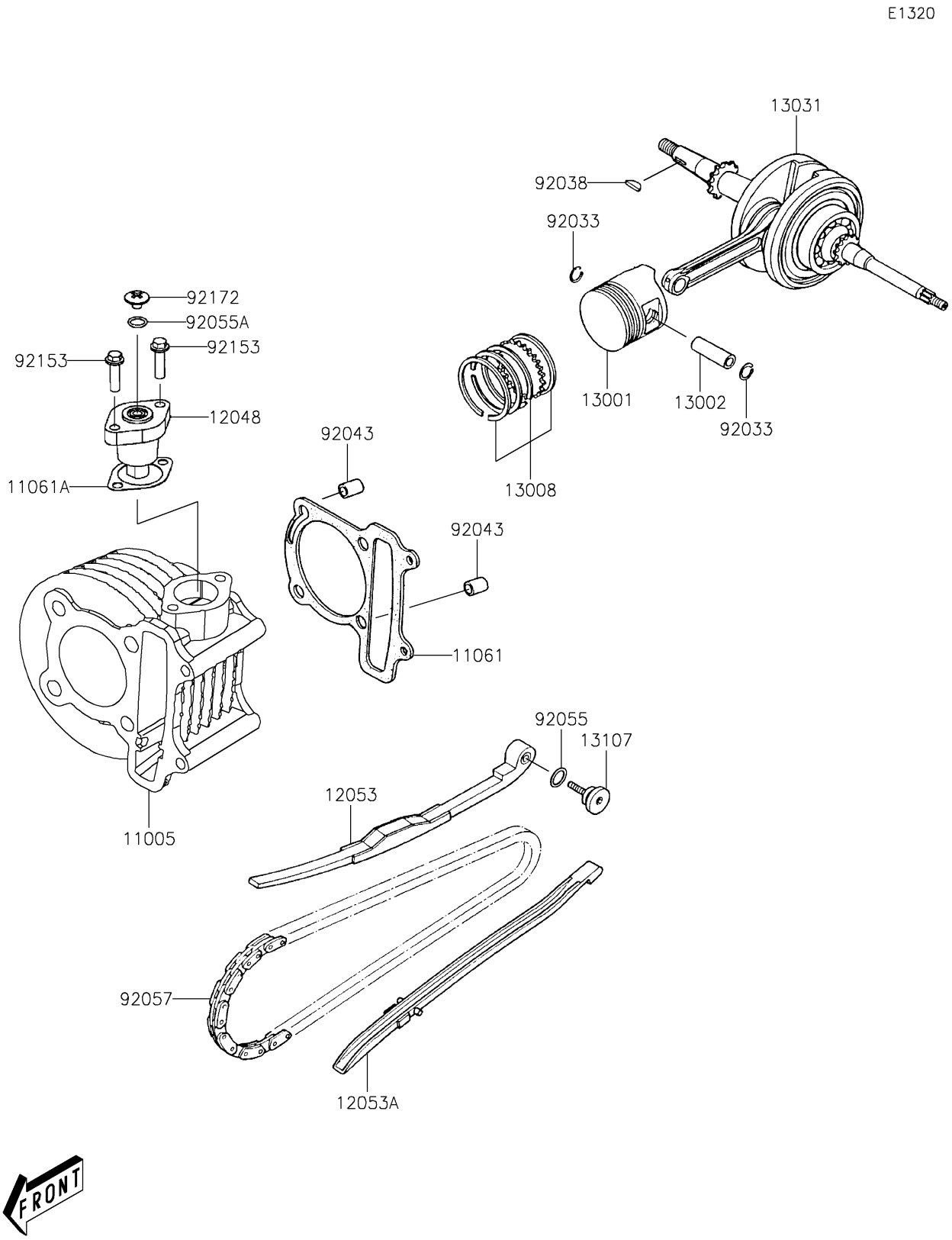

© 2026 Kawasaki Motors Corp., U.S.A.

2023 KFX®90

PARTS LIST

Crankshaft/Piston(s)

ITEM NAME	PART NUMBER	QUANTITY
CYLINDER-ENGINE (Ref # 11005)	11005-Y002	1
GASKET,CYLINDER BASE (Ref # 11061)	11061-Y009	1
GASKET,TENSIONER LIFTER (Ref # 11061A)	11061-Y070	1
TENSIONER-ASSY (Ref # 12048)	12048-Y005	1
GUIDE-CHAIN,TENSIONER (Ref # 12053)	12053-Y002	1
GUIDE-CHAIN (Ref # 12053A)	12053-Y004	1
PISTON-ENGINE (Ref # 13001)	13001-Y001	1
PIN-PISTON (Ref # 13002)	13002-Y001	1
RING-SET-PISTON (Ref # 13008)	13008-Y001	1
CRANKSHAFT-COMP (Ref # 13031)	13031-Y001	1
SHAFT,CHAIN GUIDE (Ref # 13107)	13107-Y001	1
RING-SNAP (Ref # 92033)	92033-Y001	2
KEY,WOODRUFF (Ref # 92038)	92038-Y001	1
PIN,10X16 (Ref # 92043)	92043-Y013	2
RING-O,15.2X1.5 (Ref # 92055)	92055-Y003	1
RING-O,1.5X9.5 (Ref # 92055A)	92055-Y010	1
CHAIN,CAMSHAFT (Ref # 92057)	92057-Y002	1
BOLT,FLANGE,6X22 (Ref # 92153)	92153-Y003	2
SCREW,6X6 (Ref # 92172)	92172-Y002	1

© 2026 Kawasaki Motors Corp., U.S.A.