2026 Z900RS SE ABS

PARTS DIAGRAM

Fuel Injection

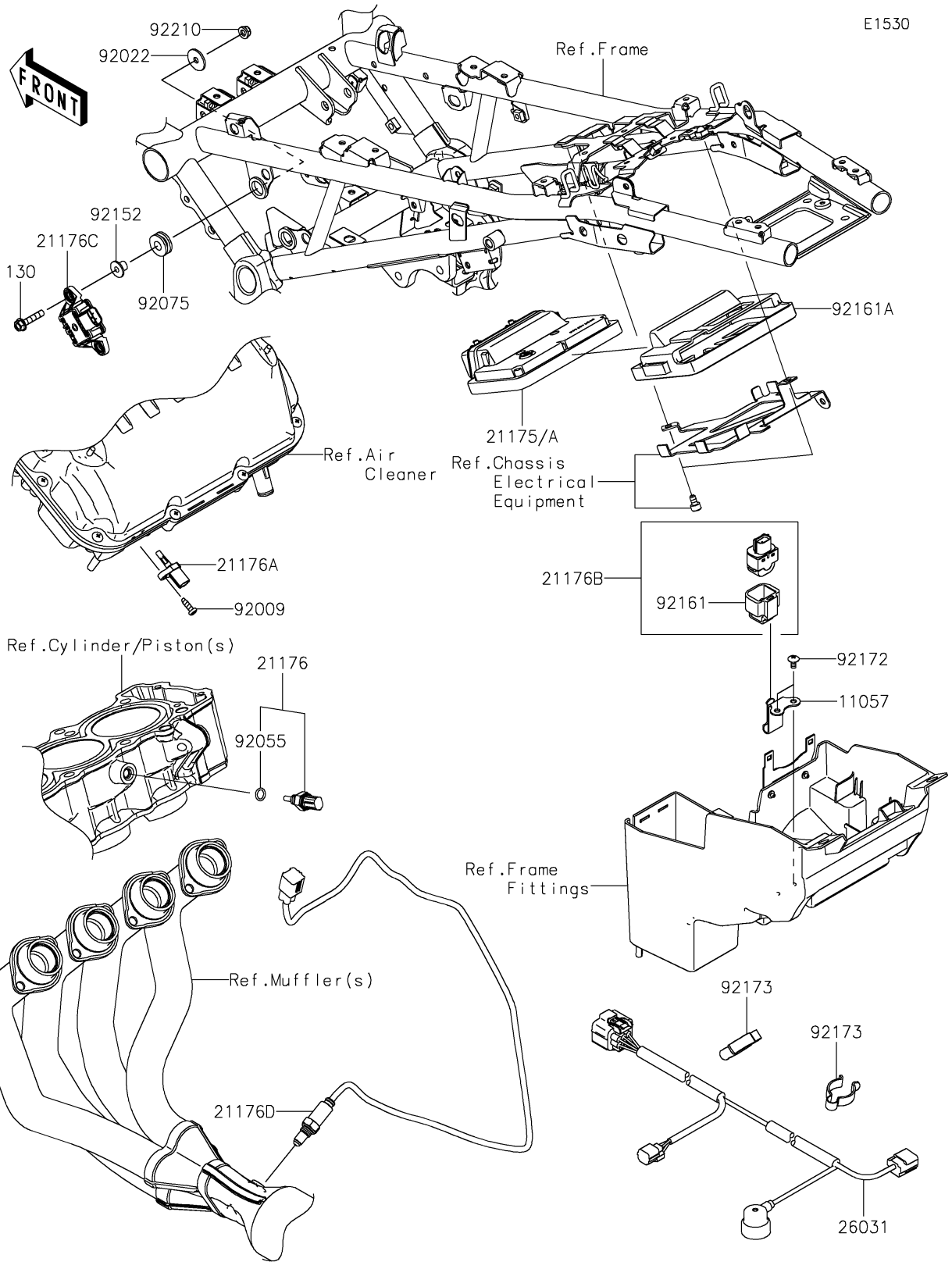

© 2026 Kawasaki Motors Corp., U.S.A.

2026 Z900RS SE ABS

PARTS LIST

Fuel Injection

ITEM NAME	PART NUMBER	QUANTITY
BRACKET,VEHICLE DOWN SENSOR (Ref # 11057)	11057-0896	1
CONTROL UNIT-ELECTRONIC (Ref # 21175)	21175-2235	1
CONTROL UNIT-ELECTRONIC (Ref # 21175A)	21175-2236	1
SENSOR,WATER TEMP (Ref # 21176)	21176-0009	1
SENSOR,AIR TEMPERATURE (Ref # 21176A)	21176-0048	1
SENSOR,VEHICLE-DOWN (Ref # 21176B)	21176-0704	1
SENSOR,GYRO (Ref # 21176C)	21176-1126	1
SENSOR,OXYGEN,FR (Ref # 21176D)	21176-1220	1
HARNESS,SUB (Ref # 26031)	26031-7055	1
SCREW,TAPPING,5X16 (Ref # 92009)	92009-1984	1
WASHER,6.5X24X2 (Ref # 92022)	92022-1690	2
RING-O,9.5X1.9 (Ref # 92055)	92055-0016	1
DAMPER (Ref # 92075)	92075-1185	2
COLLAR (Ref # 92152)	92152-0352	2
DAMPER (Ref # 92161)	92161-0951	1
DAMPER,ECU (Ref # 92161A)	92161-2140	1
SCREW,TAPPING,5X10 (Ref # 92172)	92172-0262	2
CLAMP (Ref # 92173)	92173-2419	2
NUT,LOCK,FLANGED,6MM (Ref # 92210)	92210-0303	2
BOLT-FLANGED,6X30 (Ref # 130)	130BA0630	2

© 2026 Kawasaki Motors Corp., U.S.A.