2026 Teryx4 H2

PARTS DIAGRAM

Rear Suspension

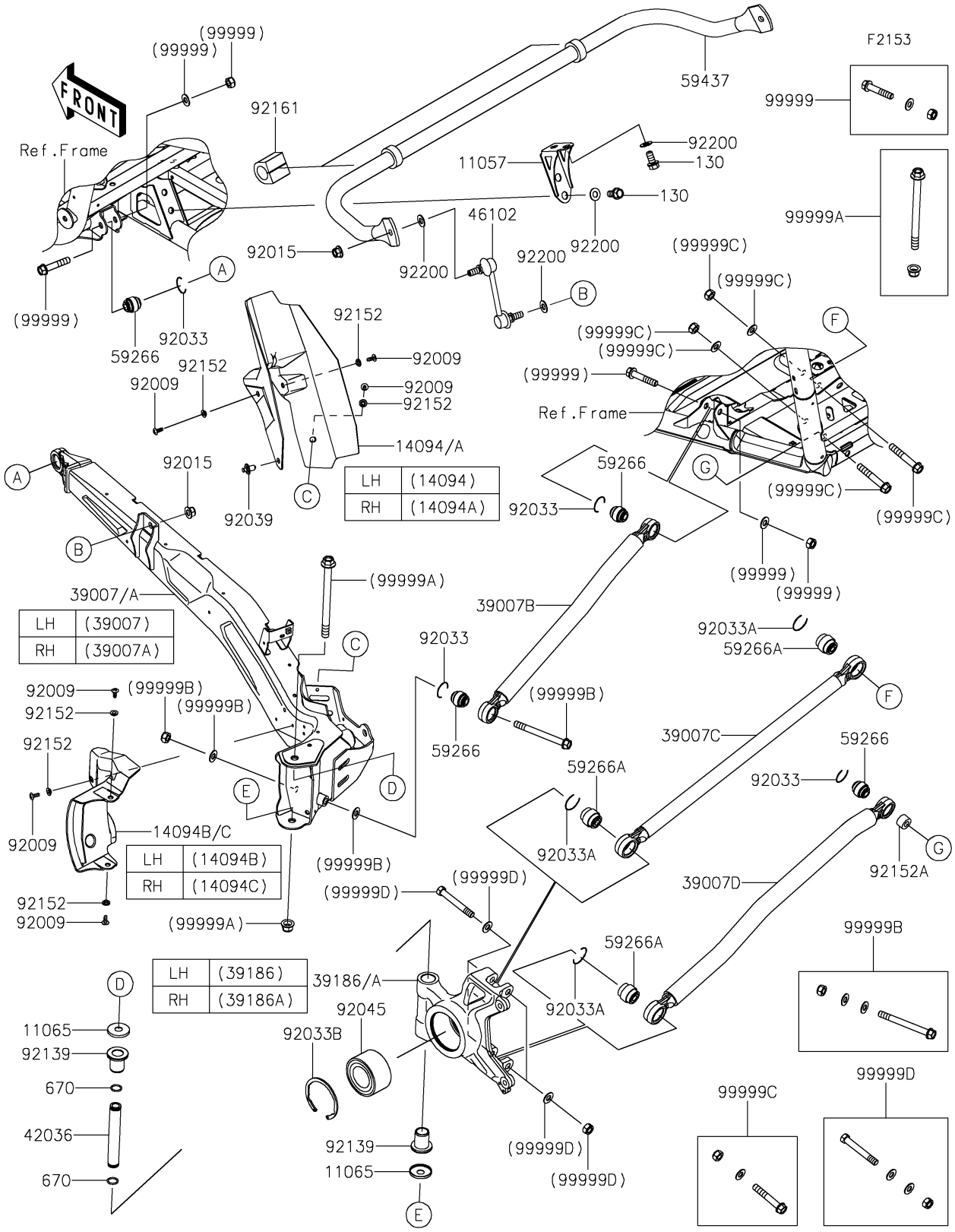

LH	(14094)
RH	(14094A)

LH	(39007)
RH	(39007A)

LH	(14094B)
RH	(14094C)

LH	(39186)
RH	(39186A)

© 2026 Kawasaki Motors Corp., U.S.A.

2026 Teryx4 H2

PARTS LIST

Rear Suspension

ITEM NAME	PART NUMBER	QUANTITY

© 2026 Kawasaki Motors Corp., U.S.A.