# 2026 NINJA® ZX™-10R

## PARTS DIAGRAM

### Stand(s)

F2190

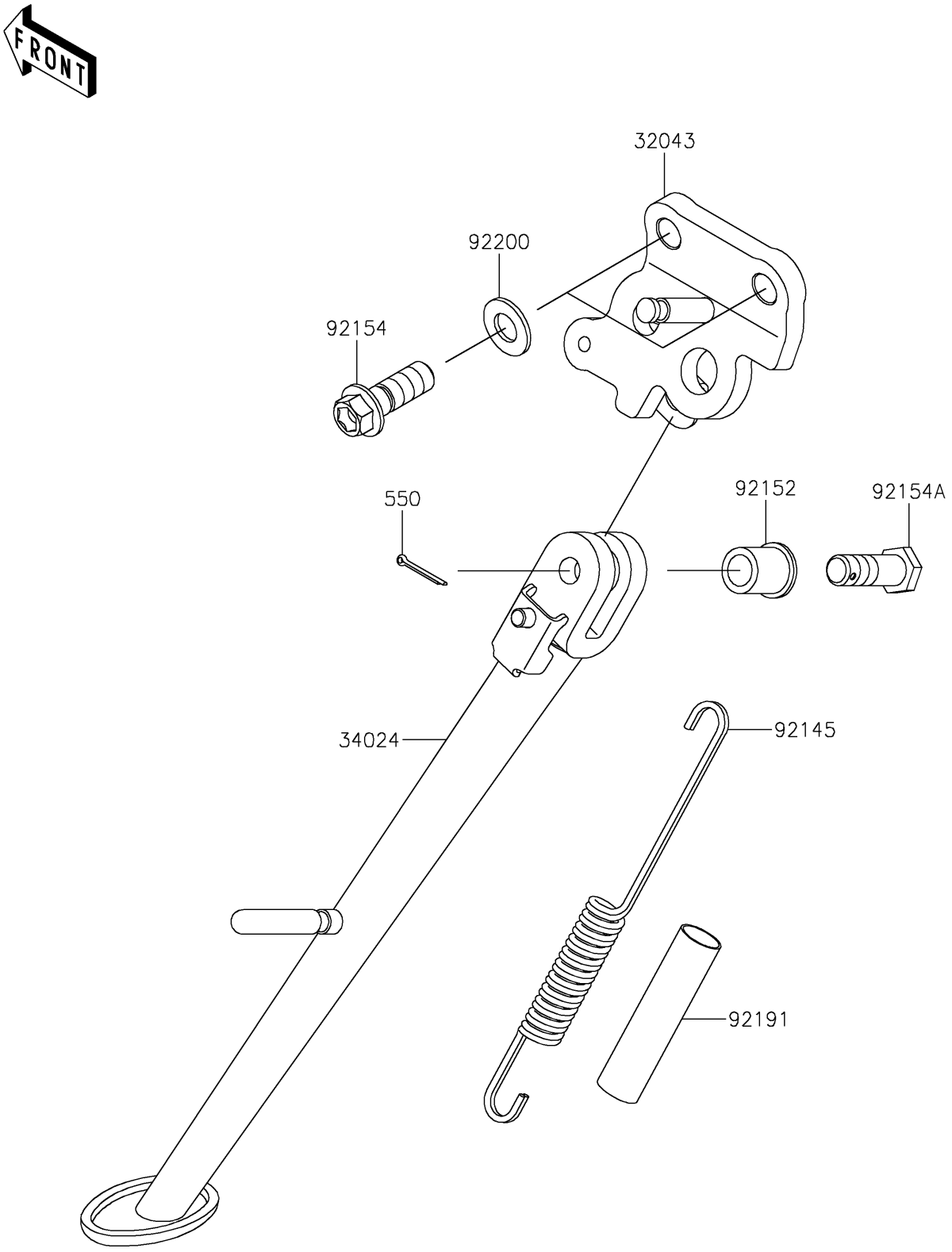


© 2026 Kawasaki Motors Corp., U.S.A.

# 2026 NINJA® ZX™-10R

## PARTS LIST

Stand(s)

| ITEM NAME | PART NUMBER | QUANTITY |
|---|---|---|
| BRACKET-STAND,F.S.BLACK (Ref # 32043) | 32043-0652-18R | 1 |
| STAND-SIDE,F.S.BLACK (Ref # 34024) | 34024-0137-18R | 1 |
| SPRING,SIDE STAND (Ref # 92145) | 92145-1731 | 1 |
| COLLAR,10.2X15X18.1 (Ref # 92152) | 92152-2171 | 1 |
| BOLT,FLANGED,10X28 (Ref # 92154) | 92154-1963 | 2 |
| BOLT,10X30 (Ref # 92154A) | 92154-2088 | 1 |
| TUBE,13X16X60 (Ref # 92191) | 92191-1001 | 1 |
| WASHER,10.2X20X1.6 (Ref # 92200) | 92200-0328 | 2 |
| PIN-COTTER,2.0X15 (Ref # 550) | 550AA2015 | 1 |

© 2026 Kawasaki Motors Corp., U.S.A.