2026 NINJA® ZX™-10R

PARTS DIAGRAM

Ignition System

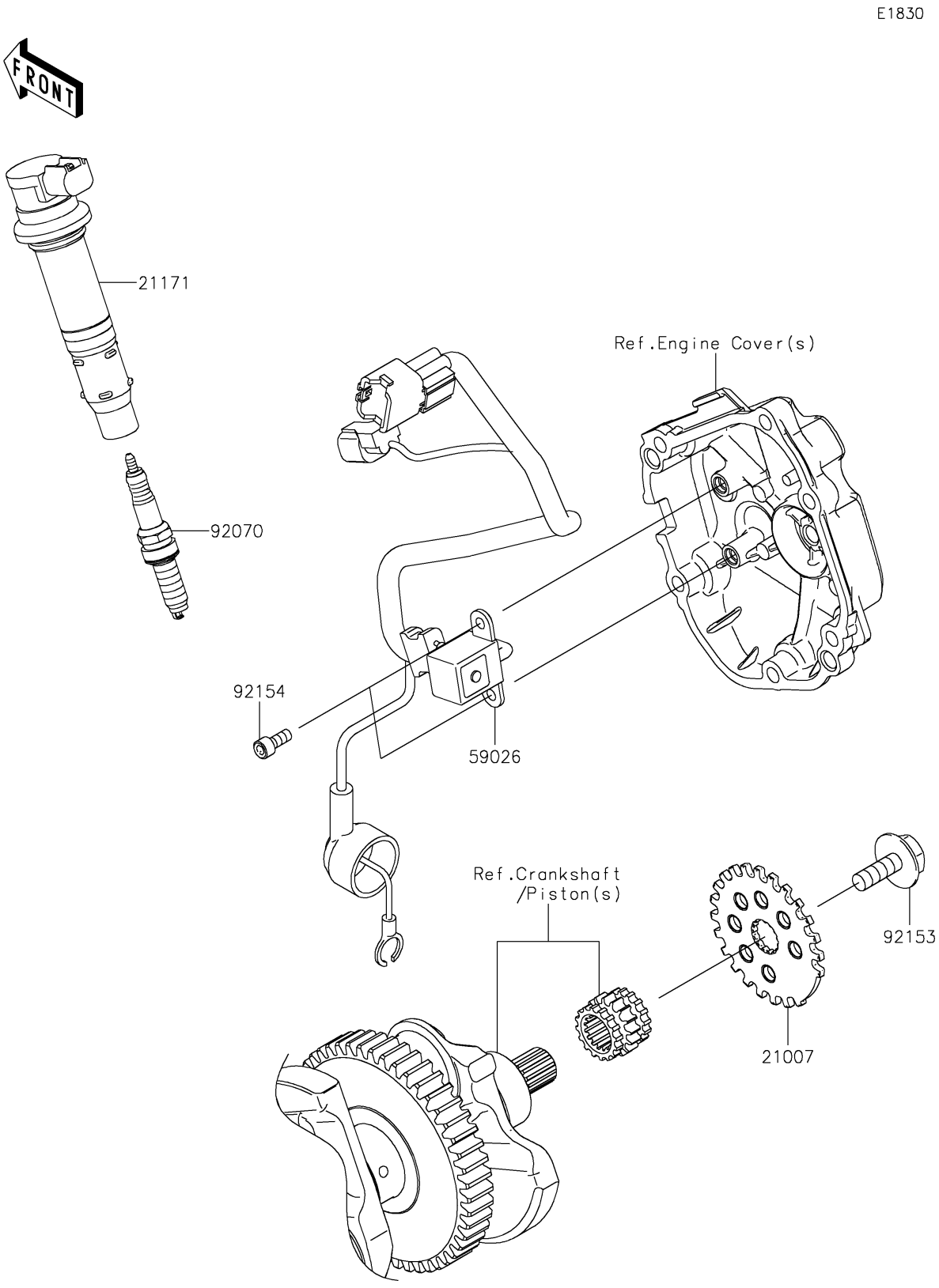

© 2026 Kawasaki Motors Corp., U.S.A.

2026 NINJA® ZX™-10R

PARTS LIST

Ignition System

ITEM NAME	PART NUMBER	QUANTITY
ROTOR,PULSING (Ref # 21007)	21007-0705	1
COIL-ASSY-IGNITION (Ref # 21171)	21171-0756	4
COIL-PULSING (Ref # 59026)	59026-0044	1
PLUG-SPARK,SILMAR9B9(NGK) (Ref # 92070)	92070-0047	4
BOLT,FLANGED,8X23 (Ref # 92153)	92153-0549	1
BOLT,SOCKET,5X12 (Ref # 92154)	92154-0503	2

© 2026 Kawasaki Motors Corp., U.S.A.