2026 NINJA® ZX™-10R

PARTS DIAGRAM

Camshaft(s)/Tensioner

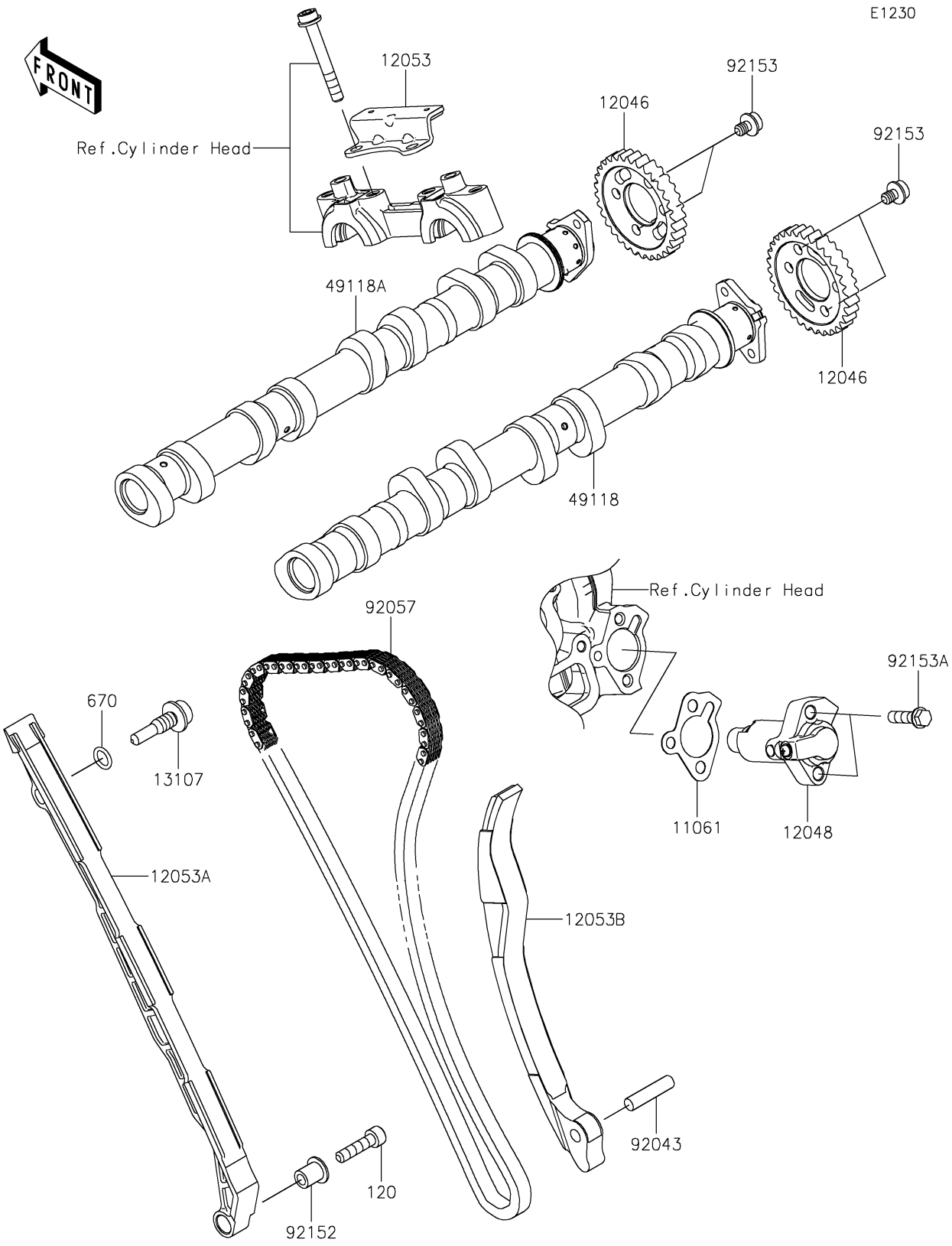

© 2026 Kawasaki Motors Corp., U.S.A.

2026 NINJA® ZX™-10R

PARTS LIST

Camshaft(s)/Tensioner

ITEM NAME	PART NUMBER	QUANTITY
GASKET,TENSIONER (Ref # 11061)	11061-0796	1
SPROCKET,32T (Ref # 12046)	12046-0610	2
TENSIONER-ASSY (Ref # 12048)	12048-0120	1
GUIDE-CHAIN,UPP (Ref # 12053)	12053-0264	1
GUIDE-CHAIN,FR (Ref # 12053A)	12053-0265	1
GUIDE-CHAIN,RR (Ref # 12053B)	12053-0266	1
SHAFT,CHAIN GUIDE (Ref # 13107)	13107-0157	1
CAMSHAFT-COMP,INTAKE (Ref # 49118)	49118-0966	1
CAMSHAFT-COMP,EXHAUST (Ref # 49118A)	49118-0967	1
PIN,7X30.7 (Ref # 92043)	92043-0062	1
CHAIN,98XRH2020-128N2 (Ref # 92057)	92057-0755	1
COLLAR (Ref # 92152)	92152-0413	1
BOLT,FLANGED,6X8 (Ref # 92153)	92153-0455	4
BOLT,FLANGED-SMALL,6X22 (Ref # 92153A)	92153-1560	2
BOLT-SOCKET,6X25 (Ref # 120)	120CA0625	1
O RING,9MM (Ref # 670)	670D1509	1

© 2026 Kawasaki Motors Corp., U.S.A.