2026 NINJA H2® ABS

PARTS DIAGRAM

Cowling Lowers

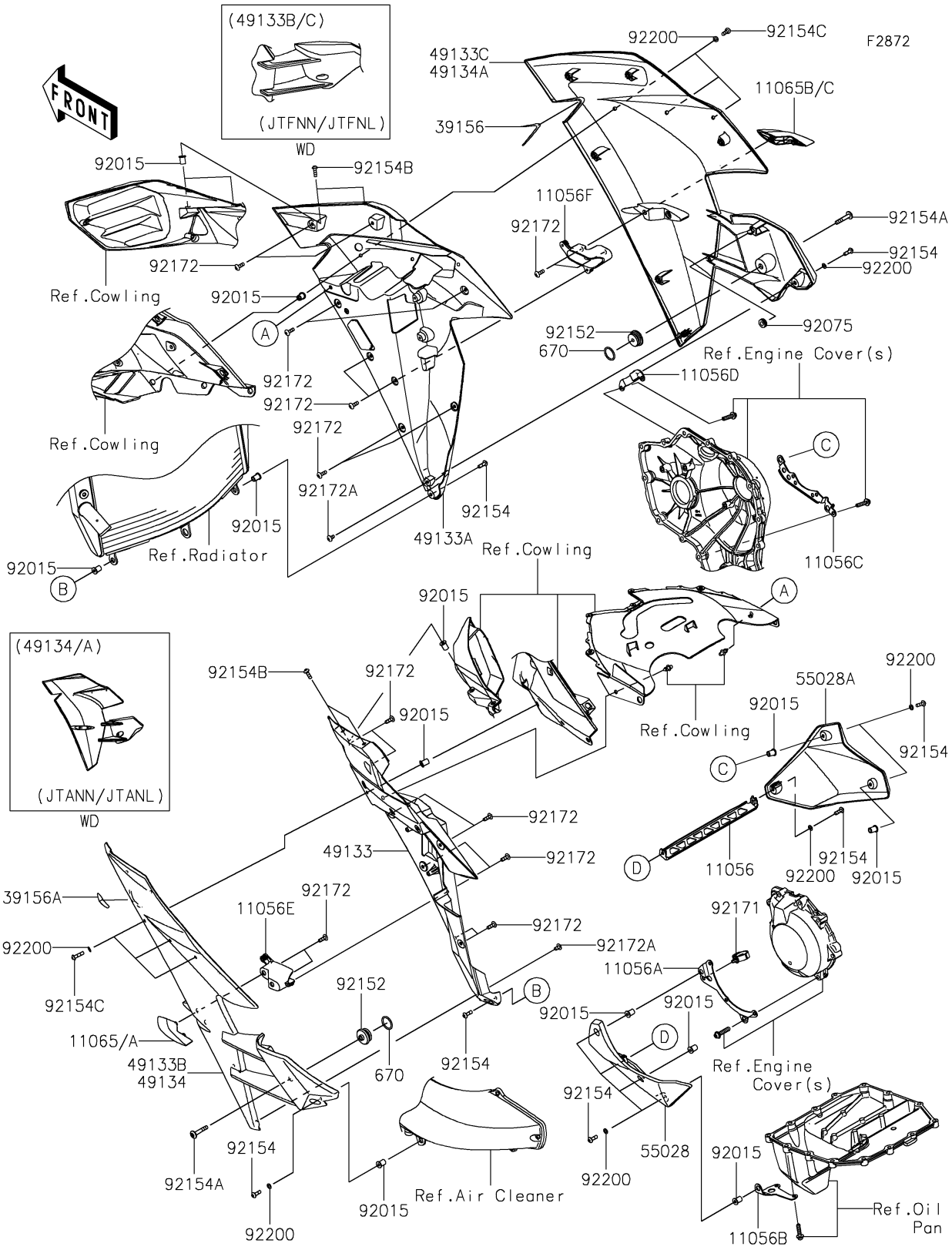

© 2026 Kawasaki Motors Corp., U.S.A.

2026 NINJA H2® ABS

PARTS LIST

Cowling Lowers

ITEM NAME	PART NUMBER	QUANTITY
BRACKET,LWR COWL. (Ref # 11056)	11056-7016	1
BRACKET,LWR COWL.,G. COVER (Ref # 11056A)	11056-7017	1
BRACKET,LWR COWL.,OIL PAN (Ref # 11056B)	11056-7018	1
BRACKET,LWR COWL.,RH (Ref # 11056C)	11056-7019	1
BRACKET,CLUTCH COVER (Ref # 11056D)	11056-7020	1
BRACKET,SHROUD,LH (Ref # 11056E)	11056-7745	1
BRACKET,OVER FLOW HOSE (Ref # 11056F)	11056-7746	1
CAP,SHROUD,LH,M.C.S.BLACK (Ref # 11065A)	11065-0886-53X	1
CAP,SHROUD,RH,M.C.S.BLACK (Ref # 11065C)	11065-0887-53X	1
PAD,SHROUD,RH (Ref # 39156)	39156-2109	1
PAD,SHROUD,LH (Ref # 39156A)	39156-2110	1
SHROUD,INNER,LH (Ref # 49133)	49133-0015	1
SHROUD,INNER,RH (Ref # 49133A)	49133-0016	1
SHROUD,LH,M.C.S.BLACK (Ref # 49133B)	49133-5053-53X	1
SHROUD,RH,M.C.S.BLACK (Ref # 49133C)	49133-5054-53X	1
COWLING,LWR,LH,M.F.S.BLACK (Ref # 55028)	55028-0540-739	1
COWLING,LWR,RH,M.F.S.BLACK (Ref # 55028A)	55028-0541-739	1
NUT,WELL,5MM (Ref # 92015)	92015-1757	18
DAMPER (Ref # 92075)	92075-161	1
COLLAR,6.3X30X16.7 (Ref # 92152)	92152-1967	2
BOLT,SOCKET,5X16 (Ref # 92154)	92154-1560	11
BOLT,SOCKET,6X34 (Ref # 92154A)	92154-1627	2
BOLT,SOCKET,5X16 (Ref # 92154B)	92154-1729	4
BOLT,SOCKET,5X20 (Ref # 92154C)	92154-1781	6
CLAMP,20MM DIA. (Ref # 92171)	92171-0069	1
SCREW,TAPPING,5X16 (Ref # 92172)	92172-0175	20
SCREW,TAPPING,5X10 (Ref # 92172A)	92172-0335	2
WASHER,5.2X10X1.0 (Ref # 92200)	92200-1820	15
O RING,22MM (Ref # 670)	670B2022	2

© 2026 Kawasaki Motors Corp., U.S.A.