2026 NINJA H2® ABS

PARTS DIAGRAM

Oil Cooler

E3034

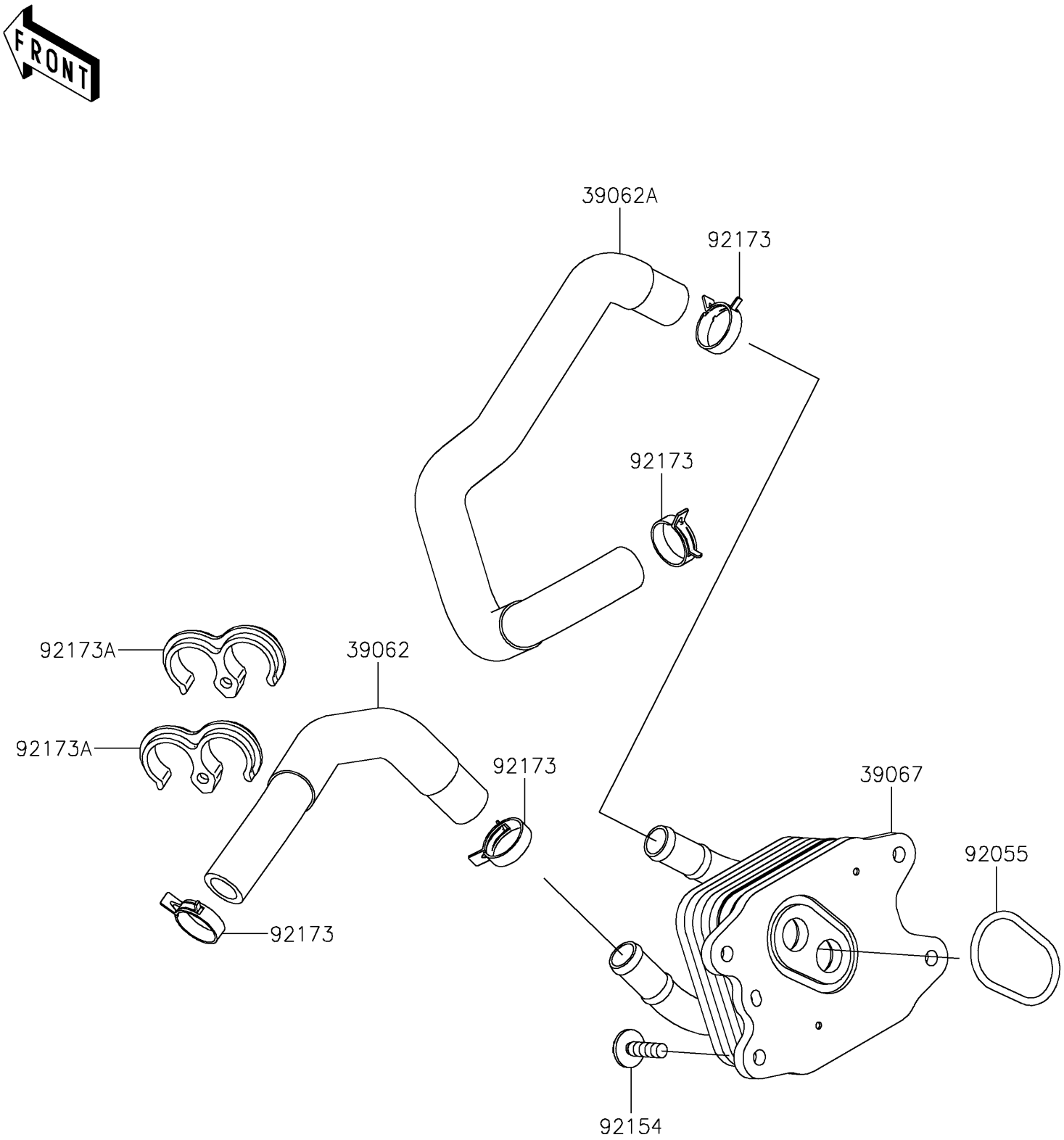

© 2026 Kawasaki Motors Corp., U.S.A.

2026 NINJA H2® ABS

PARTS LIST

Oil Cooler

ITEM NAME	PART NUMBER	QUANTITY
HOSE-COOLING,W/PIPE-OIL COOLER (Ref # 39062)	39062-0731	1
HOSE-COOLING,W/PUMP-OIL COOLER (Ref # 39062A)	39062-0812	1
COOLER-OIL (Ref # 39067)	39067-0017	1
RING-O,39.4X3.1 (Ref # 92055)	92055-1618	1
BOLT,FLANGED,6X22 (Ref # 92154)	92154-0403	4
CLAMP,20.2MM (Ref # 92173)	92173-1361	4
CLAMP,COOLING HOSE (Ref # 92173A)	92173-1366	2

© 2026 Kawasaki Motors Corp., U.S.A.